Silicon NPN Power Transistors 2SD1397

DESCRIPTION

·With TO-3PN package
·Built-in damper diode
·High voltage ,high reliability
·High speed switching

APPLICATIONS

·Color TV horizontal output applications

PINNING

PIN	DESCRIPTION
1	Base
2	Collector;connected to mounting base
3	Emitter

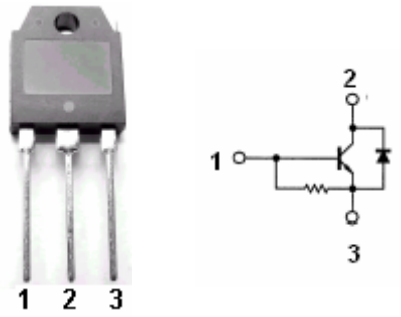

Fig.1 simplified outline (TO-3PN) and symbol

Absolute maximum ratings (Ta=25□)

SYMBOL	PARAMETER	CONDITIONS	VALUE	UNIT
V_{CBO}	Collector-base voltage	Open emitter	1500	V
V_{CEO}	Collector-emitter voltage	Open base	800	V
V_{EBO}	Emitter-base voltage	Open collector	7	V
I_C	Collector current (DC)		3.5	A
I_{CM}	Collector current-peak		10	A
P_C	Collector power dissipation	T_C=25□	80	W
T_j	Junction temperature		150	□
T_{stg}	Storage temperature		-55~150	□

CHARACTERISTICS

Tj=25□ unless otherwise specified

SYMBOL	PARAMETER	CONDITIONS	MIN	TYP.	MAX	UNIT
$V_{CEO(SUS)}$	Collector- emitter sustaining voltage	I_C=100mA; R_{BE}=∞	800			V
$V_{(BR)CBO}$	Collector-base breakdown voltage	I_C=5mA; I_E=0	1500			V
$V_{(BR)EBO}$	Emitter-base breakdown voltage	I_E=200mA; I_C=0	7			V
V_{CEsat}	Collector-emitter saturation voltage	I_C=2.5A; I_B=0.8A			8.0	V
V_{BEsat}	Base-emitter saturation voltage	I_C=2.5A; I_B=0.8A			1.5	V
I_{CBO}	Collector cut-off current	V_{CB}=800V; I_E=0			10	μA
I_{EBO}	Emitter cut-off current	V_{EB}=4V; I_C=0	40		130	mA
h_{FE}	DC current gain	I_C=0.5A ; V_{CE}=5V	8			
f_T	Transition frequency	I_C=0.5A ; V_{CE}=10V		3		MHz
V_F	Diode forward voltage	I_{EC}=3.5A			2.0	V

PACKAGE OUTLINE

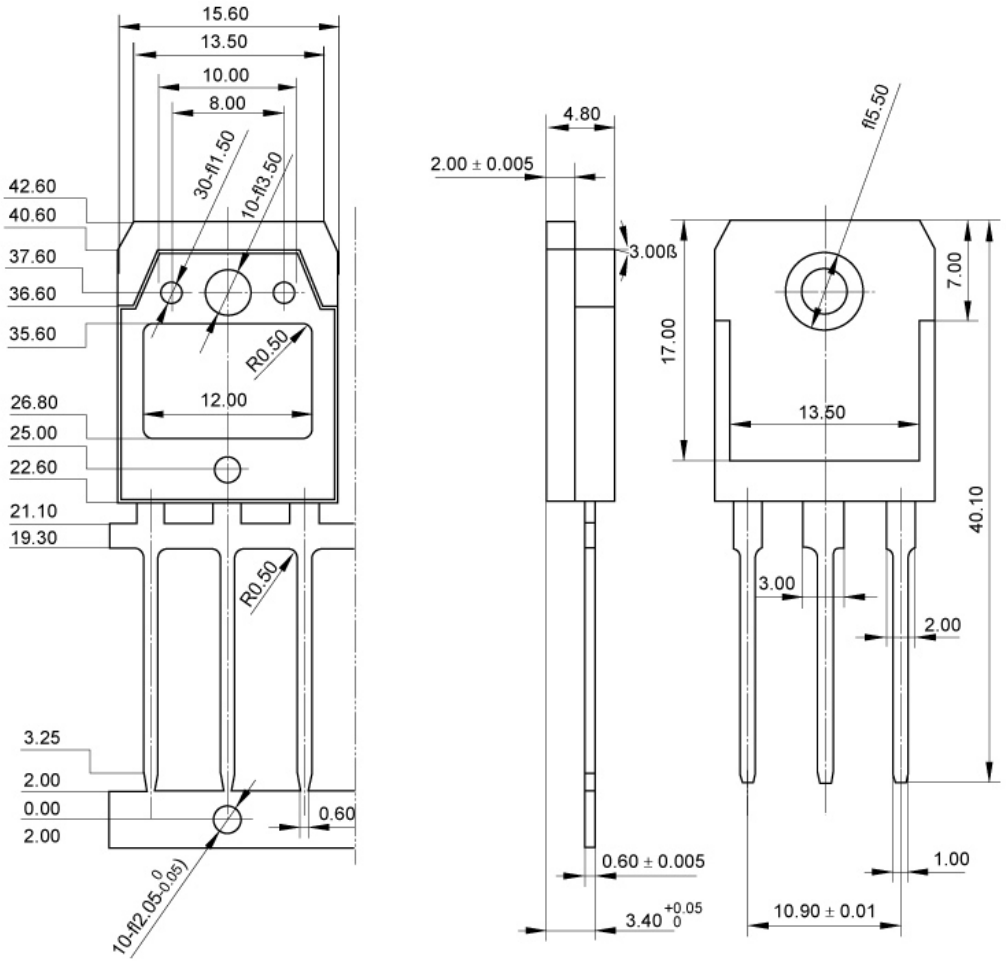

Fig.2 outline dimensions (unindicated tolerance:±0.10 mm)