Silicon NPN Power Transistors 2SD2498

DESCRIPTION

·With TO-3P(H)IS package
·High speed
·High voltage
·Low saturation voltage

APPLICATIONS

·Horizontal deflection output for high resolution display, color TV
·High speed switching applications

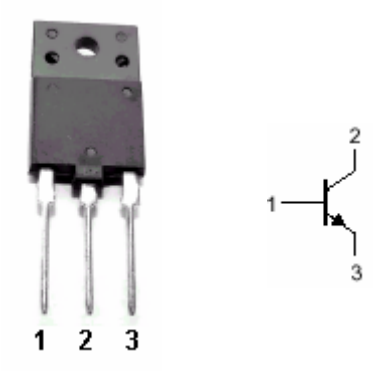

Fig.1 simplified outline (TO-3P(H)IS) and symbol

PINNING

PIN	DESCRIPTION
1	Base
2	Collector
3	Emitter

Absolute maximum ratings(Ta=25□)

SYMBOL	PARAMETER	CONDITIONS	VALUE	UNIT
V_{CBO}	Collector-base voltage	Open emitter	1500	V
V_{CEO}	Collector-emitter voltage	Open base	600	V
V_{EBO}	Emitter-base voltage	Open collector	5	V
I_C	Collector current		6	A
I_{CM}	Collector current-peak		12	A
I_B	Base current		3	A
P_C	Total power dissipation	T_C=25□	50	W
T_j	Junction temperature		150	□
T_{stg}	Storage temperature		-55~150	□

CHARACTERISTICS

Tj=25□ unless otherwise specified

SYMBOL	PARAMETER	CONDITIONS	MIN	TYP.	MAX	UNIT
$V_{(BR)CEO}$	Collector-emitter breakdown voltage	I_C=10mA ;I_B=0	600			V
V_{CEsat}	Collector-emitter saturation voltage	I_C=4A; I_B=0.8A			5	V
V_{BEsat}	Base-emitter saturation voltage	I_C=4A; I_B=0.8A		0.9	1.2	V
I_{CBO}	Collector cut-off current	V_{CB}=1500V; I_E=0			1	mA
I_{EBO}	Emitter cut-off current	V_{EB}=5V; I_C=0			10	μA
h_{FE-1}	DC current gain	I_C=1A ; V_{CE}=5V	10		30	
h_{FE-2}	DC current gain	I_C=4A ; V_{CE}=5V	5		9	
C_{ob}	Collector output capacitance	I_E=0 ; V_{CB}=10V,f=1MHz		95		pF
f_T	Transition frequency	I_C=0.1A ; V_{CE}=10V		2		MHz

Switching times :

t_s	Storage time	I_{CP}=4A;I_{B1}=0.8A f_H =15.75kHz		7	10	μs
t_f	Fall time			0.4	0.7	μs

PACKAGE OUTLINE

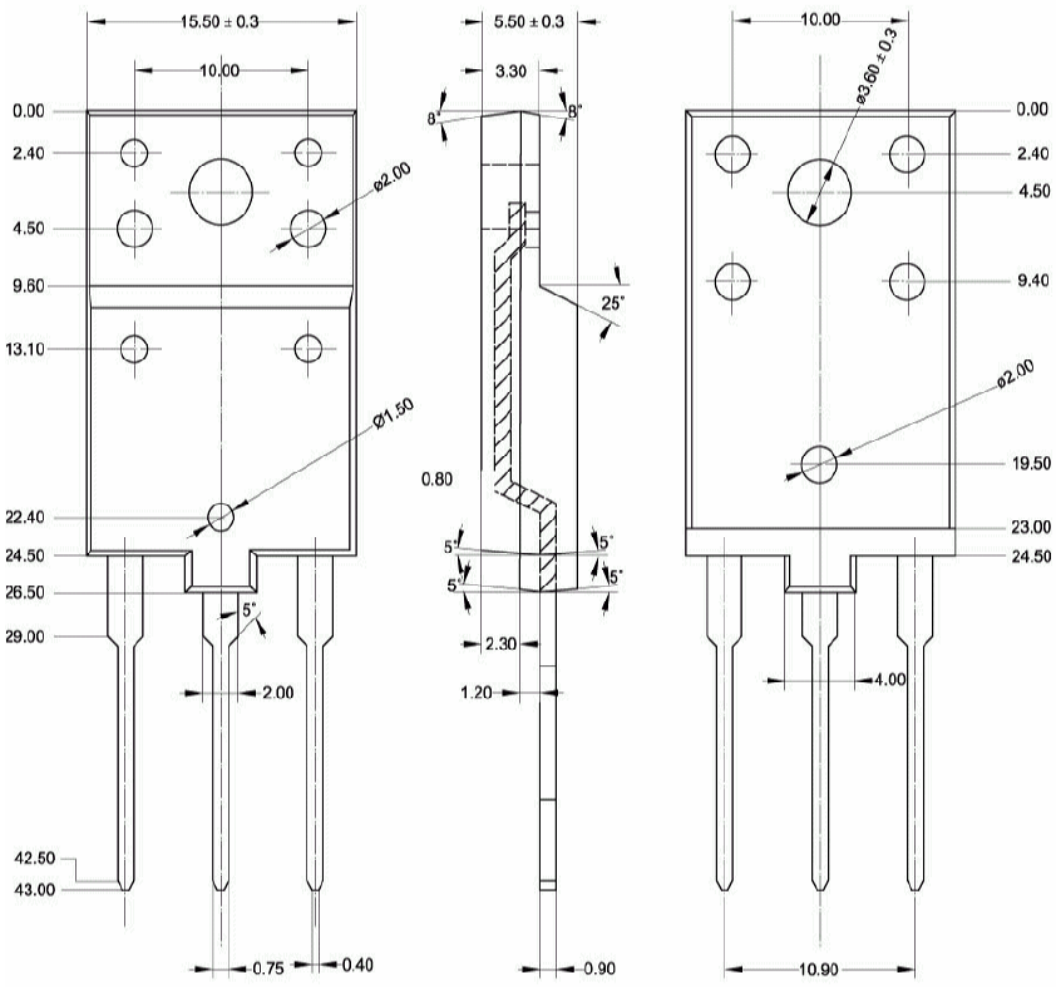

Fig.2 Outline dimensions (unindicated tolerance:±0.20 mm)

Silicon NPN Power Transistors 2SD2498

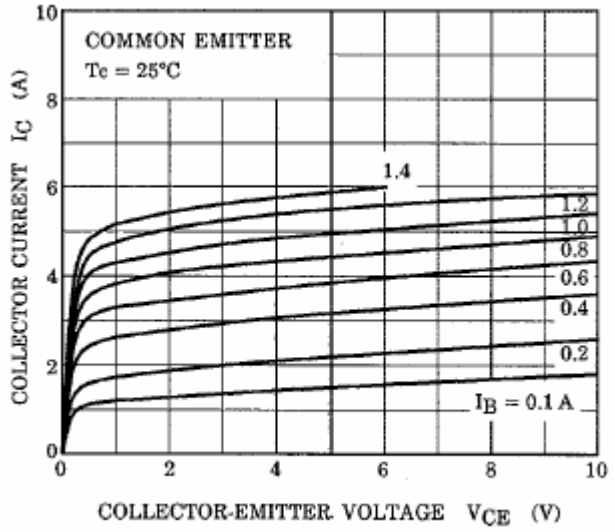

Fig.3 Static Characteristic

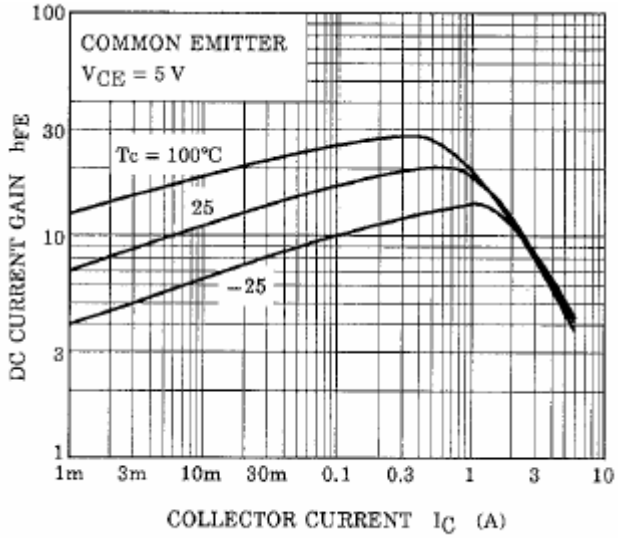

Fig.4 DC current Gain

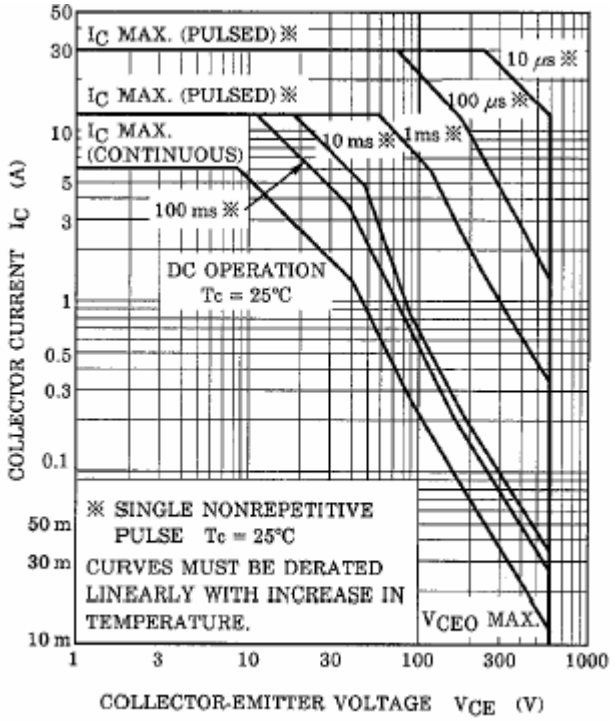

Fig.5 Safe Operating Area