isc N-Channel MOSFET Transistor 2SK1767

DESCRIPTION

- Drain Current I_D= 3.5A@ T_C=25℃
- Drain Source Voltage
  : V_{DSS}= 600V(Min)
- Fast Switching Speed

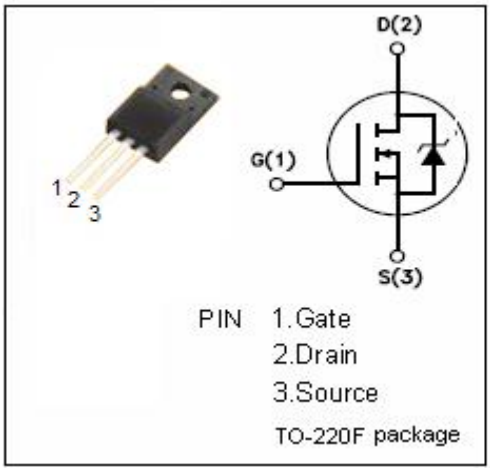

APPLICATIONS

- Power supplies, converters and power motor controls

ABSOLUTE MAXIMUM RATINGS(T_a=25℃)

SYMBOL	PARAMETER	VALUE	UNIT
V_{DSS}	Drain-Source Voltage (V_{GS}=0)	600	V
V_{GS}	Gate-Source Voltage	±30	V
I_D	Drain Current-continuous@ T_C=25℃	3.5	A
P_{tot}	Total Dissipation@T_C=25℃	40	W
T_j	Max. Operating Junction Temperature	150	℃
T_{stg}	Storage Temperature Range	-55~150	℃

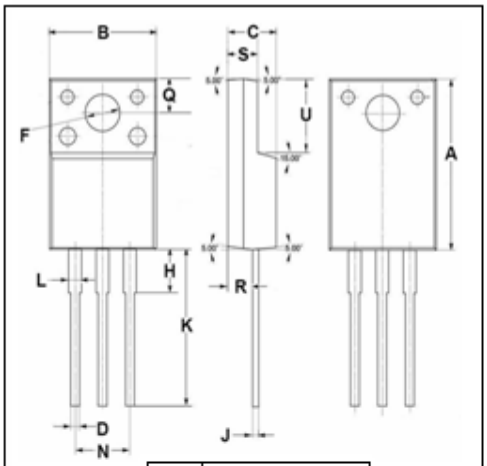

DIM	mm MIN	mm MAX
A	14.95	15.05
B	10.00	10.10
C	4.40	4.60
D	0.75	0.80
F	3.10	3.30
H	3.70	3.90
J	0.50	0.70
K	13.4	13.6
L	1.10	1.30
N	5.00	5.20
Q	2.70	2.90
R	2.20	2.40
S	2.65	2.85
U	6.40	6.60

isc N-Channel MOSFET Transistor 2SK1767

• **ELECTRICAL CHARACTERISTICS (T_C=25℃)**

SYMBOL	PARAMETER	CONDITIONS	MIN	TYPE	MAX	UNIT
$V_{(BR)DSS}$	Drain-Source Breakdown Voltage	V_{GS}= 0; I_D= 250μA	600			V
$V_{GS(th)}$	Gate Threshold Voltage	V_{DS}= V_{GS}; I_D=1mA	2.1		4	V
$R_{DS(on)}$	Drain-Source On-Resistance	V_{GS}= 10V; I_D= 2.5A			2.5	Ω
I_{GSS}	Gate-Body Leakage Current	V_{GS}= ±30V;V_{DS}= 0			±100	nA
I_{DSS}	Zero Gate Voltage Drain Current	V_{DS}= 600V; V_{GS}= 0			100	μA
C_{iss}	Input Capacitance	V_{DS}=10V; V_{GS}=0V; f_T=1MHz		2100		pF
C_{rss}	Reverse Transfer Capacitance			210		
C_{oss}	Output Capacitance			530		
t_r	Rise Time	V_{GS}=10V; I_D=2.5A; V_{DD}=200V; R_L=80Ω		20		ns
t_{on}	Turn-on Time			60		
t_f	Fall Time			30		
t_{off}	Turn-off Time			120		