FAIRCHILD SEMICONDUCTOR™

November 1984
Revised September 2000

74F04
Hex Inverter

General Description

This device contains six independent gates, each of which performs the logic INVERT function.

Ordering Code:

Order Number	Package Number	Package Description
74F04SC	M14A	14-Lead Small Outline Integrated Circuit (SOIC), JEDEC MS-120, 0.150 Narrow
74F04SJ	M14D	14-Lead Small Outline Package (SOP), EIAJ TYPE II, 5.3mm Wide
74F04PC	N14A	14-Lead Plastic Dual-In-Line Package (PDIP), JEDEC MS-001, 0.300 Wide

Devices also available in Tape and Reel. Specify by appending the suffix letter "X" to the ordering code.

Logic Symbol

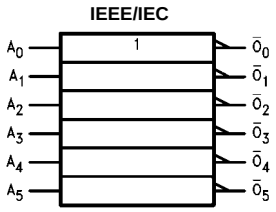

Connection Diagram

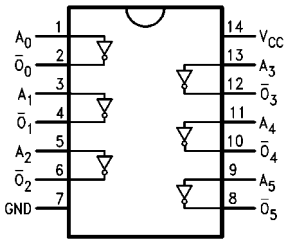

Unit Loading/Fan Out

Pin Names	Description	U.L. HIGH/LOW	Input I_{IH}/I_{IL} Output I_{OH}/I_{OL}
A_n	Inputs	1.0/1.0	20 μA/–0.6 mA
$\overline{O}_n$	Outputs	50/33.3	–1 mA/20 mA

Absolute Maximum Ratings (Note 1)

Storage Temperature	–65°C to +150°C
Ambient Temperature under Bias	–55°C to +125°C
Junction Temperature under Bias	–55°C to +150°C
V_{CC} Pin Potential to Ground Pin	–0.5V to +7.0V
Input Voltage (Note 2)	–0.5V to +7.0V
Input Current (Note 2)	–30 mA to +5.0 mA
Voltage Applied to Output in HIGH State (with V_{CC} = 0V)	
Standard Output	–0.5V to V_{CC}
3-STATE Output	–0.5V to +5.5V
Current Applied to Output in LOW State (Max)	twice the rated I_{OL} (mA)
ESD Last Passing Voltage (Min)	4000V

Recommended Operating Conditions

Free Air Ambient Temperature	0°C to +70°C
Supply Voltage	+4.5V to +5.5V

Note 1: Absolute maximum ratings are values beyond which the device may be damaged or have its useful life impaired. Functional operation under these conditions is not implied.

Note 2: Either voltage limit or current limit is sufficient to protect inputs.

DC Electrical Characteristics

Symbol	Parameter	Min	Typ	Max	Units	V_{CC}	Conditions
V_{IH}	Input HIGH Voltage	2.0			V		Recognized as a HIGH Signal
V_{IL}	Input LOW Voltage			0.8	V		Recognized as a LOW Signal
V_{CD}	Input Clamp Diode Voltage			–1.2	V	Min	I_{IN} = –18 mA
V_{OH}	Output HIGH Voltage 10% V_{CC} Output HIGH Voltage 5% V_{CC}	2.5 2.7			V	Min	I_{OH} = –1 mA I_{OH} = –1 mA
V_{OL}	Output LOW Voltage 10% V_{CC}			0.5	V	Min	I_{OL} = 20 mA
I_{IH}	Input HIGH Current			5.0	µA	Max	V_{IN} = 2.7V
I_{BVI}	Input HIGH Current Breakdown Test			7.0	µA	Max	V_{IN} = 7.0V
I_{CEX}	Output HIGH Leakage Current			50	µA	Max	V_{OUT} = V_{CC}
V_{ID}	Input Leakage Test	4.75			V	0.0	I_{ID} = 1.9 µA All other pins grounded
I_{OD}	Output Leakage Circuit Current			3.75	µA	0.0	V_{IOD} = 150 mV All other pins grounded
I_{IL}	Input LOW Current			–0.6	mA	Max	V_{IN} = 0.5V
I_{OS}	Output Short-Circuit Current	–60		–150	mA	Max	V_{OUT} = 0V
I_{CCH}	Power Supply Current		2.8	4.2	mA	Max	V_O = HIGH
I_{CCL}	Power Supply Current		10.2	15.3	mA	Max	V_O = LOW

AC Electrical Characteristics

Symbol	Parameter	T_A = +25°C, V_{CC} = +5.0V, C_L = 50 pF			T_A = –55°C to +125°C, V_{CC} = +5.0V, C_L = 50 pF		T_A = 0°C to +70°C, V_{CC} = +5.0V, C_L = 50 pF		Units
		Min	Typ	Max	Min	Max	Min	Max	
t_{PLH} t_{PHL}	Propagation Delay A_n to $\overline{O}_n$	2.4 1.5	3.7 3.2	5.0 4.3	2.0 1.5	7.0 6.5	2.4 1.5	6.0 5.3	ns

Physical Dimensions inches (millimeters) unless otherwise noted

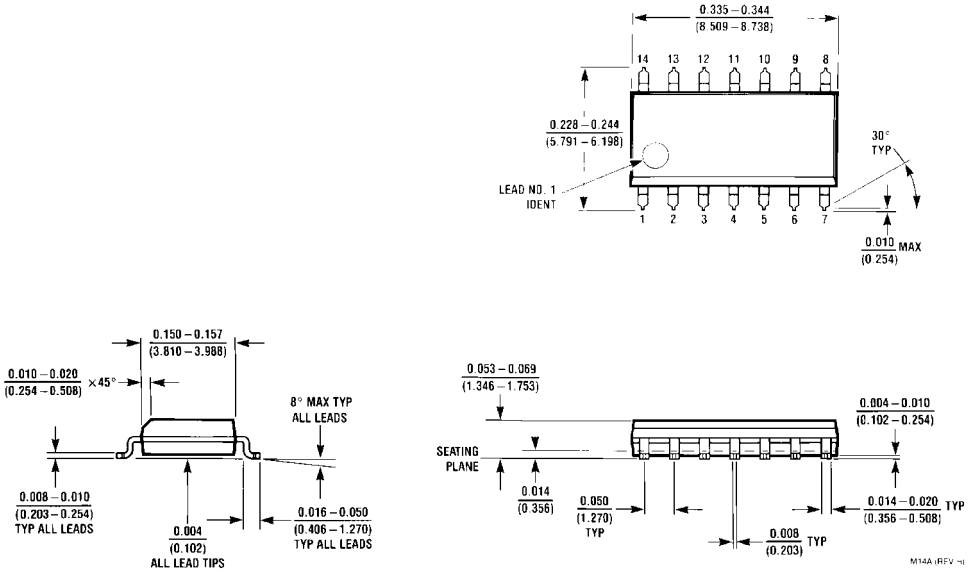

14-Lead Small Outline Integrated Circuit (SOIC), JEDEC MS-120, 0.150 Narrow
Package Number M14A

Physical Dimensions inches (millimeters) unless otherwise noted (Continued)

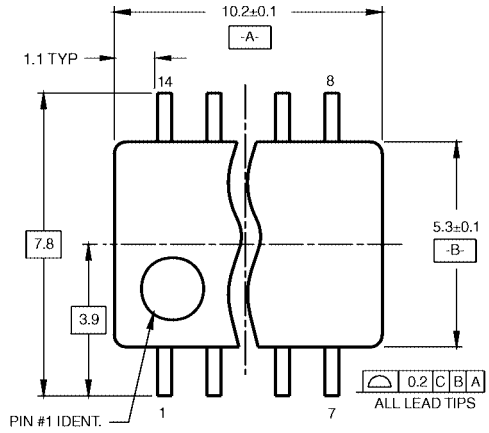

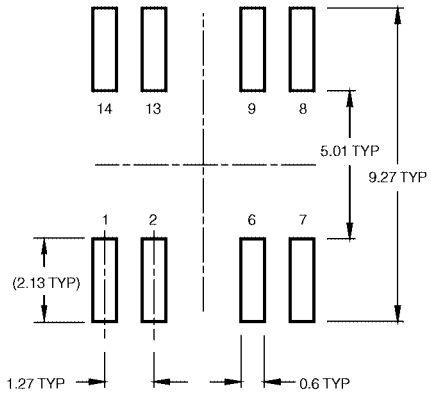

LAND PATTERN RECOMMENDATION

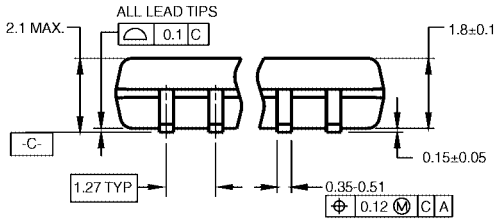

DIMENSIONS ARE IN MILLIMETERS

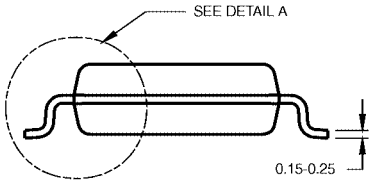

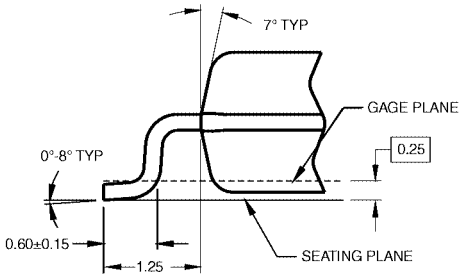

DETAIL A

NOTES:

A. CONFORMS TO EIAJ EDR-7320 REGISTRATION, ESTABLISHED IN DECEMBER, 1998.

B. DIMENSIONS ARE IN MILLIMETERS.

C. DIMENSIONS ARE EXCLUSIVE OF BURRS, MOLD FLASH, AND TIE BAR EXTRUSIONS.

M14DRevB1

14-Lead Small Outline Package (SOP), EIAJ TYPE II, 5.3mm Wide
Package Number M14D

Physical Dimensions inches (millimeters) unless otherwise noted (Continued)

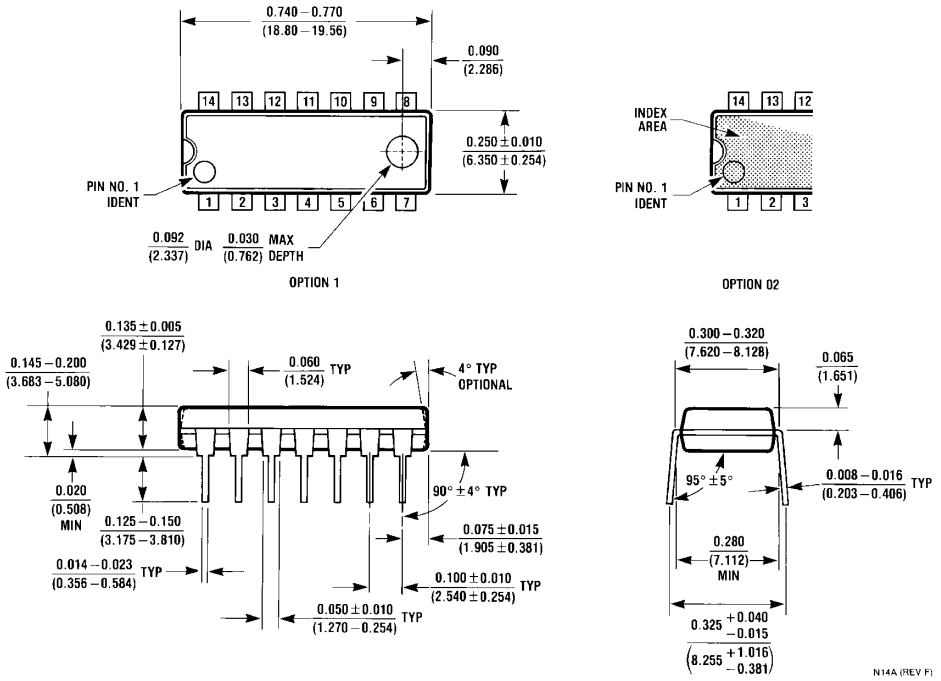

14-Lead Plastic Dual-In-Line Package (PDIP), JEDEC MS-001, 0.300 Wide
Package Number N14A