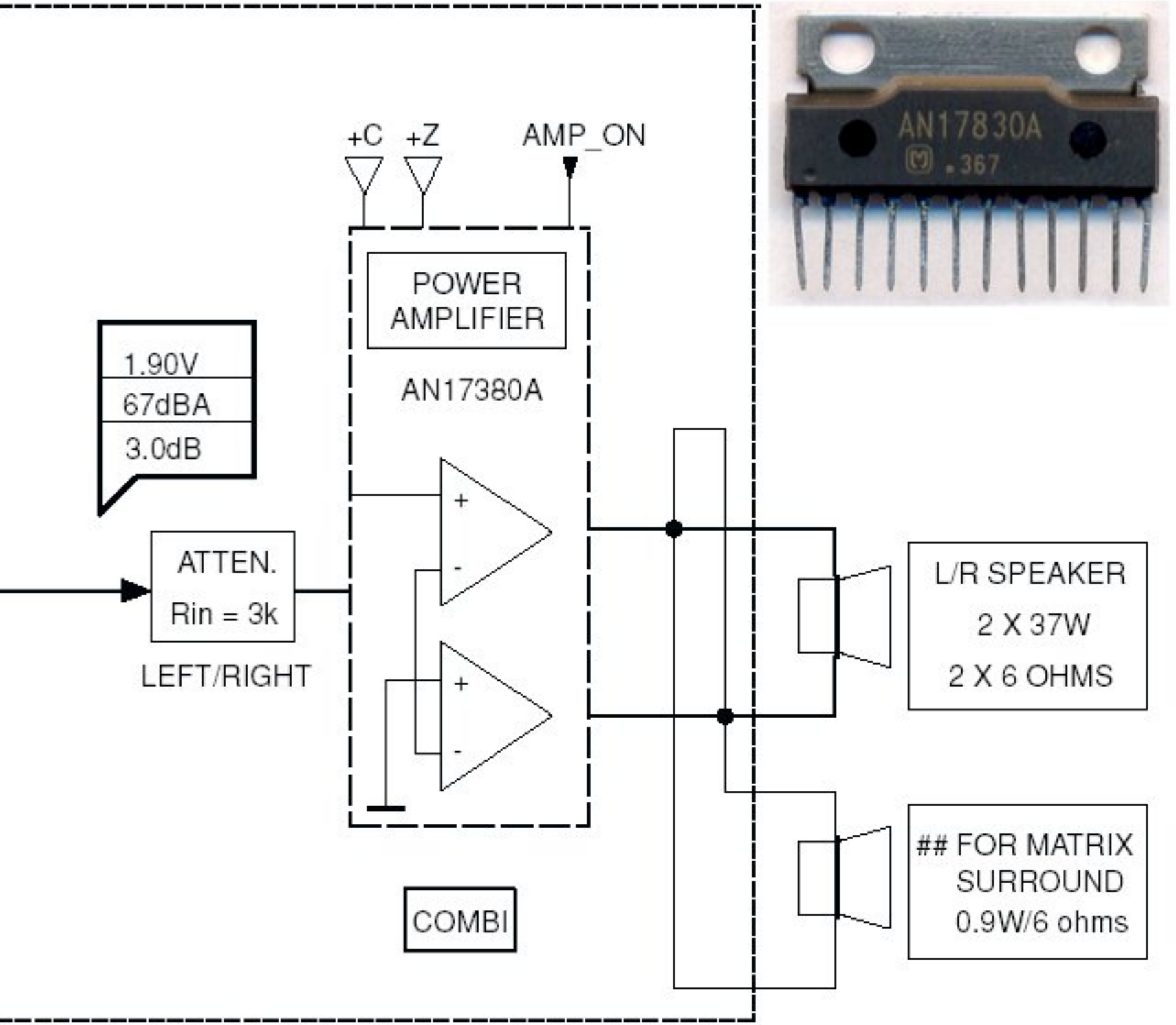
+C
+Z
AMP_ON
POWER AMPLIFIER
AN17380A
1.90V
67dBA
3.0dB
ATTEN.
Rin = 3k
LEFT/RIGHT
+
-
+
-
COMBI
L/R SPEAKER
2 X 37W
2 X 6 OHMS
FOR MATRIX SURROUND
0.9W/6 ohms
AN17830A
367

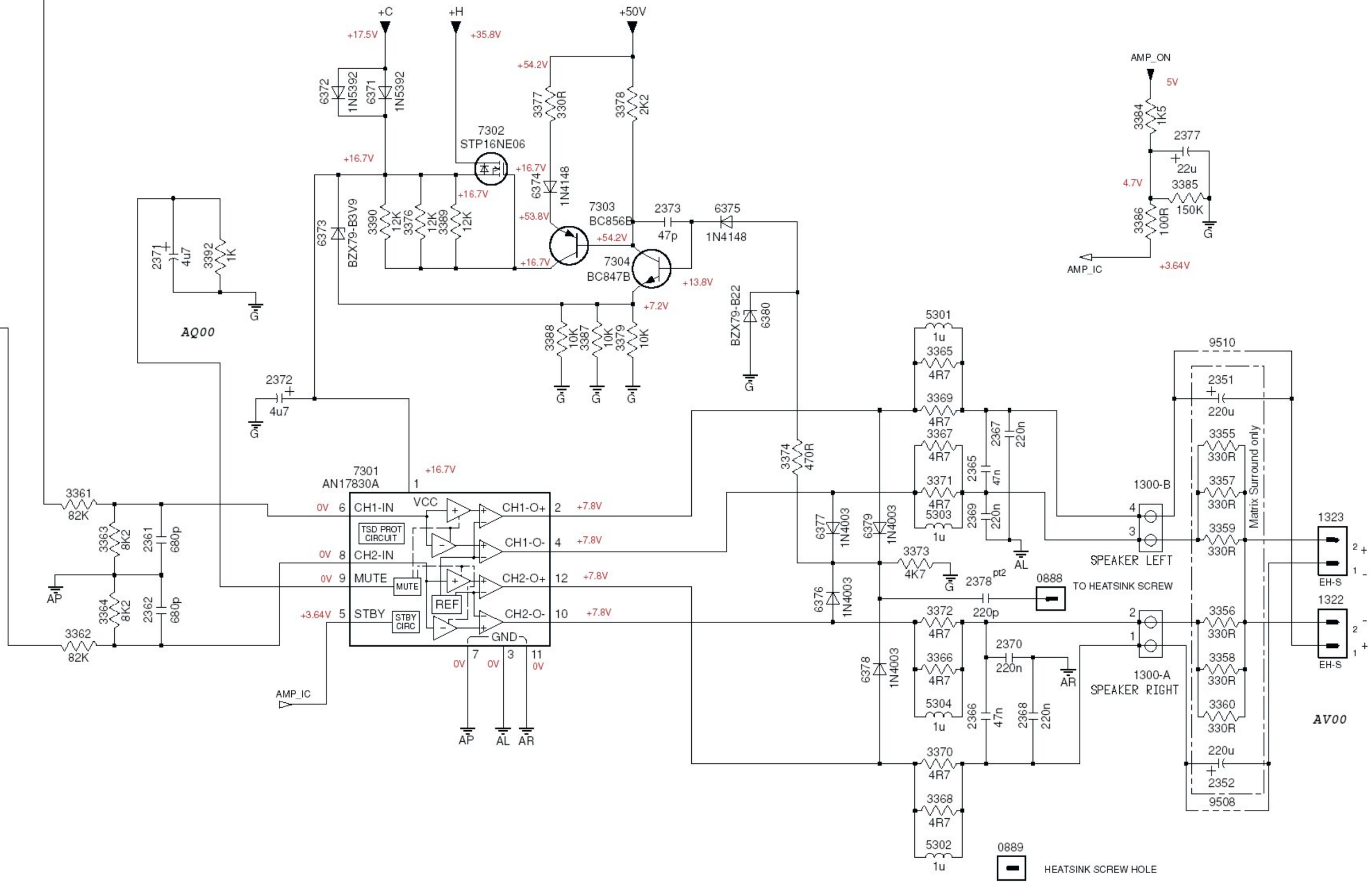
+C
+H
+50V
+17.5V
+35.8V
+54.2V
6372
1N5392
6371
1N5392
3377
330R
3378
2K2
7302
STP16NE06
+16.7V
6374
1N4148
7303
BC856B
2373
47p
6375
1N4148
7304
BC847B
+53.8V
+13.8V
+7.2V
6373
BZX79-B3V9
3390
12K
3376
12K
3389
12K
2371
4u7
3392
1K
AQ00
3388
10K
3387
10K
3379
10K
BZX79-B22
6380
AMP_ON
5V
3384
1K5
2377
22u
4.7V
3385
150K
3386
100R
AMP_IC
+3.64V
2372
4u7
7301
AN17830A
VCC
CH1-IN
CH1-O+
CH1-O-
CH2-IN
CH2-O+
MUTE
CH2-O-
STBY
GND
TSD PROT CIRCUIT
MUTE
REF
STBY CIRC
0V
+7.8V
+3.64V
3361
82K
3363
8K2
2361
680p
3364
8K2
2362
680p
3362
82K
AP
AL
AR
AMP_IC
5301
1u
3365
4R7
3369
4R7
3367
4R7
3371
4R7
5303
1u
2365
47n
2367
220n
2369
220n
3374
470R
6377
1N4003
6379
1N4003
6376
1N4003
6378
1N4003
3373
4K7
2378 pt2
0888
TO HEATSINK SCREW
3372
4R7
220p
3366
4R7
5304
1u
2370
220n
2366
47n
2368
220n
3370
4R7
3368
4R7
5302
1u
0889
HEATSINK SCREW HOLE
1300-B
SPEAKER LEFT
1300-A
SPEAKER RIGHT
9510
2351
220u
3355
330R
3357
330R
3359
330R
3356
330R
3358
330R
3360
330R
Matrix Surround only
220u
2352
9508
1323
EH-S
1322
EH-S
AV00