Attansic® Technology Corporation

# ATTP1

# Over Temperature Protection Controller

## Datasheet

Release Date: Jan. 2005

**Revision: 1.3**

# Revision History

| Version | Date | Changes from Last Version |
|---|---|---|
| 0.1(Preliminary) | Feb/21/2002 | |
| 1.0 | April/23/2002 | Modified Table2 (P.3)<br>When AC Power loss or PSON_IN is 1, the OTP Event Status is Release |
| 1.1 | Dec/10/2002 | Add：Electrical Characteristics |
| 1.3 | Jan/18/2005 | Add “Ordering Information” about green device description |

## Table of Contents

## Figures



## Tables

## 1. General Description

ATTP1 is system over temperature protection device and is equipped one Thermo Diode and one Thermistor sensing inputs. When the temperature reaches the preset trigger value (Over Temperature Protection, OTP, event occurred), PSON_OUT is pulled up to turn the system power off, and a siren signal is sent out. PSON_OUT will keep logic high until AC/5VSB power loss, or PWRBNT pressed. The trigger temperature/value of Termo Diode and thermister can be individually set by the corresponding external resister.

## 2. Features

- Two sets of temperature sensing mechanism
  - One Thermo Diode input for embedded thermo diode in CPU
  - One Thermister input supporting legacy CPU
- Programmable trigger temperature by external resister
- OTP event latched until power loss, or pressing Power Button
- Real time monitoring and reacting (Less than 1μ second)
- Siren alarming users during OTP event occurrence
- Accuracy: ±5℃
- Package: SOP 8-Pin

## 3. Pin Configuration

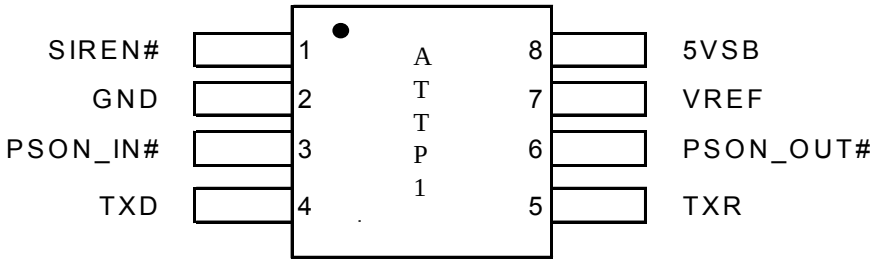


**Figure 1. ATTP1 Pin Diagram (Top View)**

※ **Ordering Information**

ATTP1- Commercial Standard
ATTP1G- Green Device with Commercial Standard

## 4. Pin Description

**Pin Type Description**

$OD_{12}$ – Open-drain with 12mA sink current
INt – TTL level input

| Pin No. | Pin name | I/O Type | Function |
|---|---|---|---|
| 1 | SIREN# | OD12 | Send siren/alert signal when Over Temperature event occurs |
| 2 | GND | Ground | Ground Pin |
| 3 | PSON_IN# | Int | PSON input |
| 4 | TXD | Analog Input | Thermal diode temperature sensing input |
| 5 | TXR | Analog Input | Thermistor temperature sensing input |
| 6 | PSON_OUT# | OD12 | System power shut down control output pin |
| 7 | VREF | Analog Output | Reference voltage output |
| 8 | 5VSB | Power | 5V Stand-By Power input |

**Table 1. ATTP1 Pin Description**

| 5VSB | OTP Event | PSON_IN | PSON_OUT | Siren | OTP Event Status |
|---|---|---|---|---|---|
| On | No | 0 | 0 | Off | Release |
| On | No | 1 | 1 | Off | Release |
| On | Yes | 0 | 1 | ON | Latch |
| On | Yes | 1 | 1 | Off | Release |
| Off | - | - | - | - | Release |

When AC Power loss or PSON_IN is 1, the OTP Event Status is Release

**Table 2. PSON_IN versus PSON_OUT True Table**

## 5. Electrical Characteristics

| Symbol | Parameter | Conditions | Min | Typical | Max | Units |
|---|---|---|---|---|---|---|
| **5VSB** | | | | | | |
| VCC | Power Pin | | 4.5 | 5 | 5.5 | V |
| **GND** | | | | | | |
| VSS | Ground Pin | | | 0 | | V |
| **PSON_IN** | | | | | | |
| $V_{IL}$ | Input low voltage | | | | 0.8 | |
| $V_{IH}$ | Input high voltage | | 2.0 | | | V |
| **Siren** | | | | | | |
| OD/sink current | | when $V_{OL}$=0.4V | 12 | | | mA |
| Freq. slow | | | 110 | 140 | 170 | Hz |
| Freq. fast | | | 250 | 280 | 310 | Hz |
| **Pson_out#** | | | | | | |
| OD/sink current | | when $V_{OL}$=0.4V | 12 | | | mA |
| **TXD**（Analog input） | | | | | | |
| $V_{TR}$ | Trigger voltage | | 0.556 | 0.566 | 0.576 | V |
| **TXR**（Analog input） | | | | | | |
| $V_{TR}$ | Trigger voltage | | 0.470 | 0.500 | 0.530 | V |
| **VREF** | | | | | | |
| $V_O$ | Output voltage | VCC=5.0V Cap=0.1uF | | 3.75 | | V |

## 6.Package Information
### SOP-8 Outline Dimension

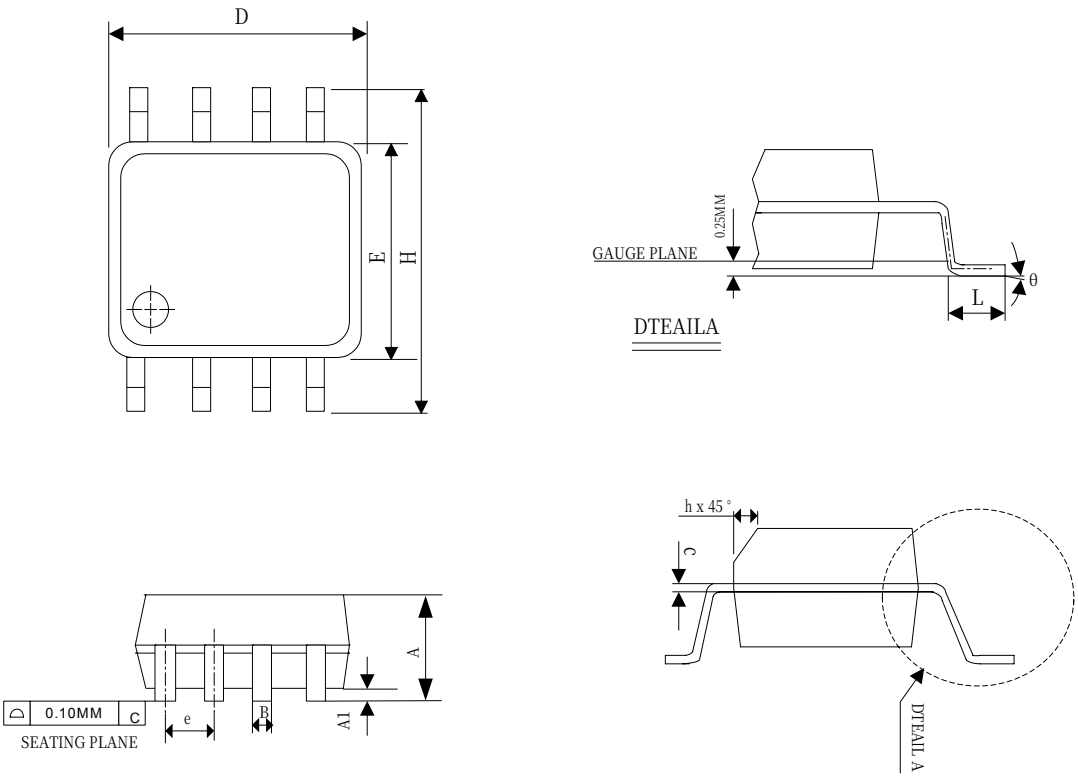


| Symbol | Dimension in mm | | Dimension in inch | |
|---|---|---|---|---|
| | Min | Max | Min | Max |
| A | 1.35 | 1.75 | 0.0532 | 0.0688 |
| A1 | 0.10 | 0.25 | 0.0040 | 0.0098 |
| B | 0.33 | 0.51 | 0.013 | 0.020 |
| C | 0.19 | 0.25 | 0.0075 | 0.0098 |
| e | 1.27BSC | | 0.050BSC | |
| D | 4.80 | 5.00 | 0.1890 | 0.1968 |
| H | 5.80 | 6.20 | 0.2284 | 0.2440 |
| E | 3.80 | 4.00 | 0.1497 | 0.1574 |
| L | 0.40 | 1.27 | 0.016 | 0.050 |
| h | 0.25 | 0.50 | 0.0099 | 0.0196 |
| θ | $0^0$ | $8^0$ | $0^0$ | $8^0$ |
| JEDEC | MS-012 (AA) | | | |

*NOTES: DIMENSION “D” DOES NOT INCLUDE MOLD FLASH, PROTRUSIONS OR GATE BURRS.

MOLD FLASH, PROTRUSIONS AND GATE BURRS SHALL NOT EXCEED 0.15 MM (0.006 INCH) PER

SIDE.

The materials contained in this document replace all previous documentation issued for the related products included herein. Please contact Attansic Technology Corp. for the latest documents.



All specifications are subject to change without notice.

Additional copies of this document or other Attansic literatures may be obtained from:

**3FL., No 147, Hsien Cheng 9th Rd.,**
**Chu-Pei, Hsin-Chu Hsien, Taiwan**

**Tel: 886-3-5545660**
**Fax: 886-3-5545661**

To find out more about Attansic, visit our World Wide Web address at:

**http://www.attansic.com.tw/**