Dual Comparators

BA6993 BA6993F

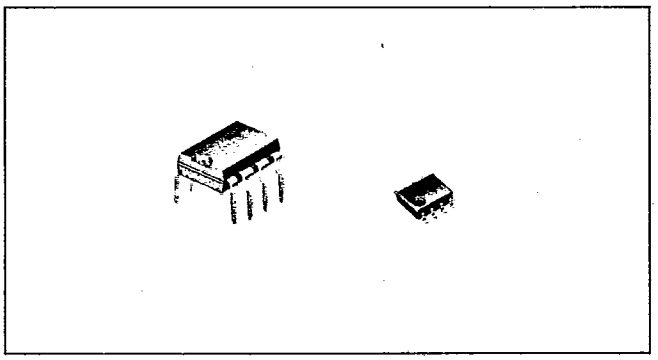

The BA6993 and BA6993F are monolithic dual comparators. With open-collector outputs, the device allows wired OR output connections. They feature a wide supply voltage range: 2 to 36 V for single power supply, and ±1 to ±18 V for dual power supply.

Features

1. Wide supply voltage range: 2 to 36 V for single power supply; ±1 to ±18 V for dual power supply.
2. Small current requirement (0.4 mA typ. at V_{CC}=5 V).
3. Small input offset current (±5.0 nA typ. at V_{CC}=5 V) and small input offset voltage (±1.0 mV typ. at V_{CC}=5 V).
4. Wide common-mode input voltage range (−0.3 to 36 V).
5. Open collector output.
6. Comes in 8-pin DIP (BA6993) or 8-pin MF package (BA6993F).

Dimensions (Unit: mm)

BA6993

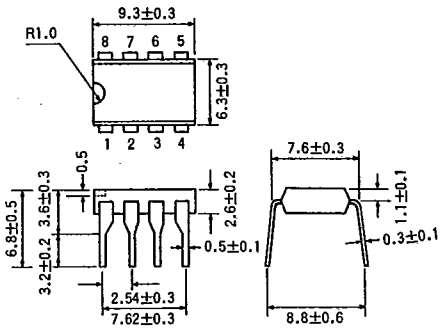

Fig. 1

BA6993F

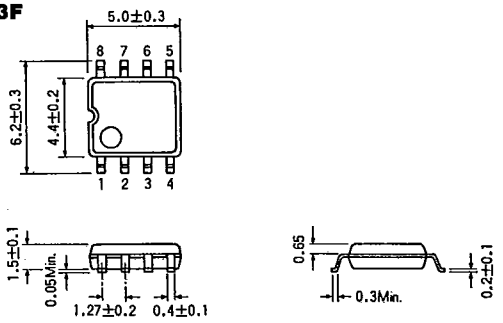

Fig. 2

Block Diagram

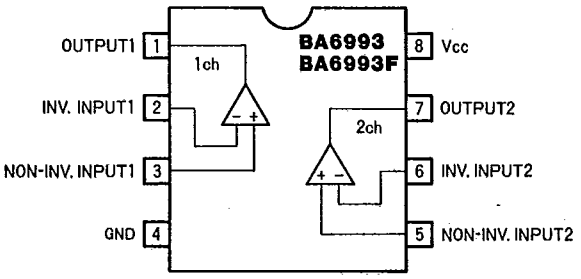

Fig. 3

Absolute Maximum Ratings (Ta=25°C)

Parameter	Symbol	Limits	Unit
Supply voltage	V_{CC}	36(±18)	V
Power dissipation	Pd	500*1	mW
Differential input voltage	V_{ID}	36	V
Common-mode input voltage	V_{ICM}	−0.3~36	V
Operating temperature range	Topr	−20~75*2	°C
Storage temperature range	Tstg	−55~125	°C

*1 Derating is done at 5mW/°C for operation above Ta=25°C.
*2 For an extended operating temperature range, consult your local ROHM representative.

Electrical Characteristics (Ta=25°C, V_{CC}=5V)

Parameter	Symbol	Min.	Typ.	Max.	Unit
Input offset voltage	V_{IO}	—	±1.0	±5.0	mV
Input offset current	I_{IO}	—	±5.0	±50	nA
Input bias current	I_B	—	25	250	nA
Voltage gain	G_V	50	200	—	V/mV
Common-mode input voltage range	V_{ICM}	0	—	V_{CC}-1.5	V
Response time	tr	—	1.3	—	μs
Output current (SINK)	Iosink	10	16	—	mA
Output saturation voltage	Vosat	—	250	400	mV
Output leakage current	I leak	—	0.1	—	nA
Quiescent current	I_Q	—	0.4	1.0	mA