DTV1500Mxx

(CRT HORIZONTAL DEFLECTION) HIGH VOLTAGE DAMPER DIODE

MAIN PRODUCTS CHARACTERISTICS

$I_{F(AV)}$	6 A
V_{RRM}	1500 V
V_F (max)	1.65 V
trr (max)	135 ns

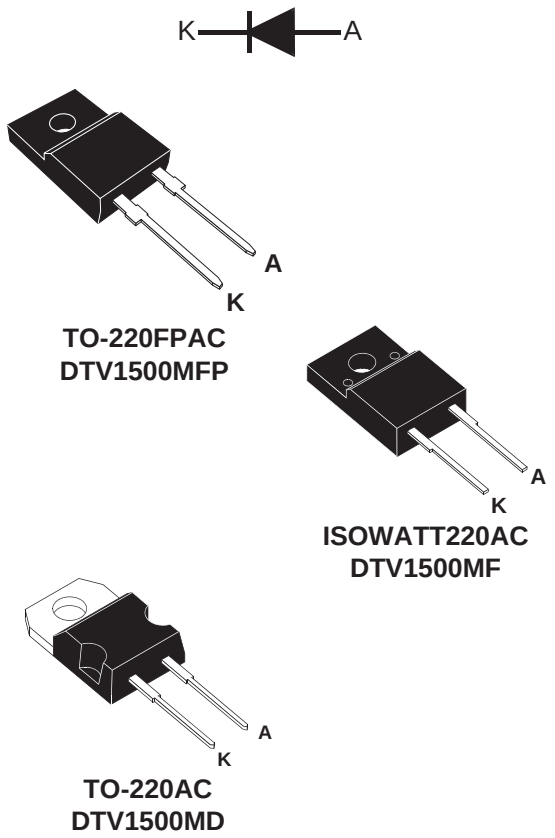

FEATURES AND BENEFITS

- High breakdown voltage capability
- High frequency operation
- Specified turn on switching characteristics
- Very fast recovery diode
- Low static and peak forward voltage drop for low dissipation
- Insulated package (ISOWATT220AC, TO-220FPAC): Insulating voltage = 2000V DC Capacitance = 12pF
- Planar technology allowing high quality and best electrical characteristics

DESCRIPTION

High voltage diode especially designed for horizontal deflection stage in standard and high resolution displays for TV's and monitors.

This device is packaged in TO-220AC, ISOWATT220AC and TO-220FPAC (insulated package).

ABSOLUTE MAXIMUM RATINGS

Symbol	Parameter		Value	Unit
V_{RRM}	Repetitive peak reverse voltage		1500	V
$I_{F(RMS)}$	RMS forward current		15	A
I_{FSM}	Surge non repetitive forward current	tp = 10ms sinusoidal	75	A
T_{stg}	Storage temperature		- 65 to 150	°C
T_j	Maximum operating junction temperature		150	°C

THERMAL RESISTANCE

Symbol	Parameter		Value	Unit
$R_{th(j-c)}$	Junction to Case thermal resistance	TO-220FPAC	5.4	°C/W
		ISOWATT220AC	4.75	
		TO-220AC	2.5	

STATIC ELECTRICAL CHARACTERISTICS

Symbol	Parameter	Test Conditions		Value		Unit
				Typ	Max	
I_R *	Reverse leakage current	V_R = 1500V	Tj = 25°C		100	µA
			Tj = 125°C	100	1000	µA
V_F **	Forward voltage drop	I_F =6A	Tj = 25°C	1.4	2.2	V
			Tj = 125°C	1.20	1.65	

pulse test : * tp = 5 ms , δ < 2%
** tp = 380 µs, δ < 2%

RECOVERY CHARACTERISTICS

Symbol	Parameter	Test Conditions		Value		Unit
				Typ	Max	
t_{rr}	Reverse recovery time	Tj = 25°C	I_F = 1 A dI$_F$/dt = -50A/µs V_R = 30V	110	135	ns
t_{rr}	Reverse recovery time	Tj = 25°C	I_F = 100mA I_R = 100mA I_{RR} = 10mA	750		ns

TURN-ON SWITCHING CHARACTERISTICS

Symbol	Parameter	Test Conditions		Value		Unit
				Typ	Max	
t_{fr}	Forward recovery time	Tj = 100°C	I_F = 6 A dI$_F$/dt = 80 A/µs V_{FR} = 3 V	570		ns
V_{Fp}	Peak forward voltage	Tj = 100°C	I_F = 6A dI$_F$/dt = 80 A/µs	21	28	V

To evaluate the maximum conduction losses use the following equation :

$P = 1.37 \times I_{F(AV)} + 0.047 \times I_F{}^2{}_{(RMS)}$

Fig. 1: Power dissipation versus peak forward current (triangular waveform, δ = 0.45)

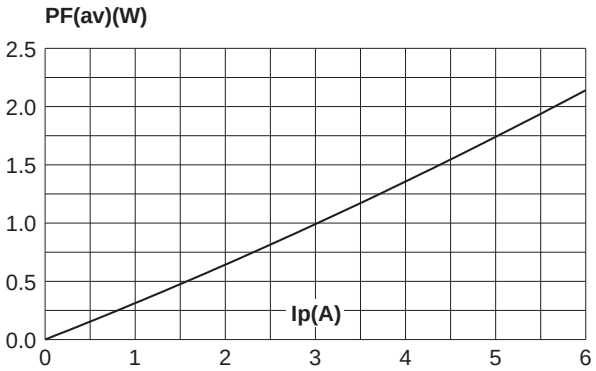

Fig. 2-1: Average current versus case temperature (δ = 0.5) (TO-220FPAC)

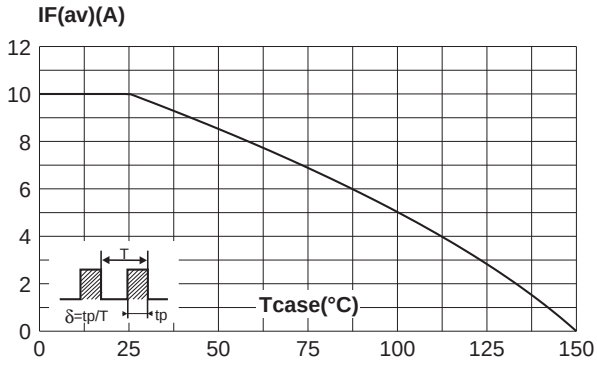

Fig. 2-2: Average current versus case temperature (δ = 0.5) (ISOWATT220AC)

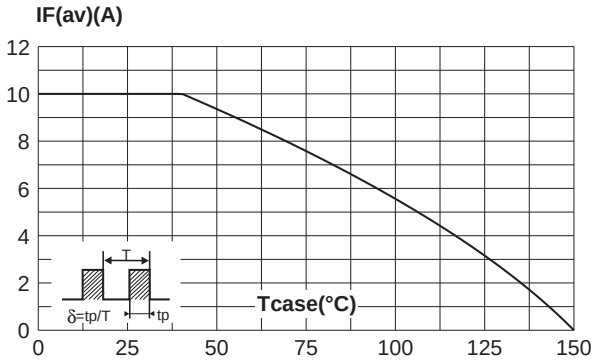

Fig. 2-3: Average current versus case temperature (δ = 0.5) (TO-220AC)

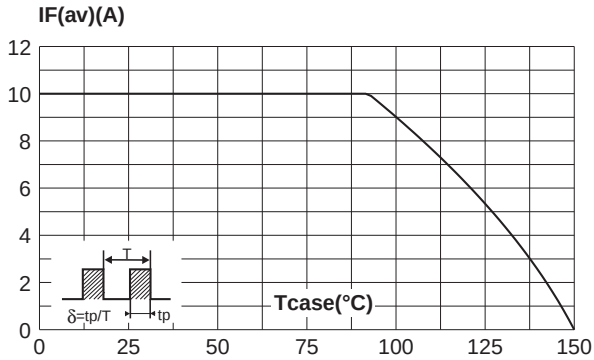

Fig. 3: Forward voltage drop versus forward current (DTV1500MFP/F/D)

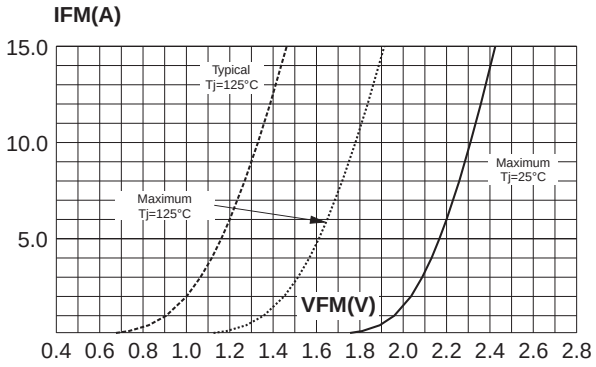

Fig. 4-1: Non repetitive surge peak forward current versus overload duration (TO-220FPAC)

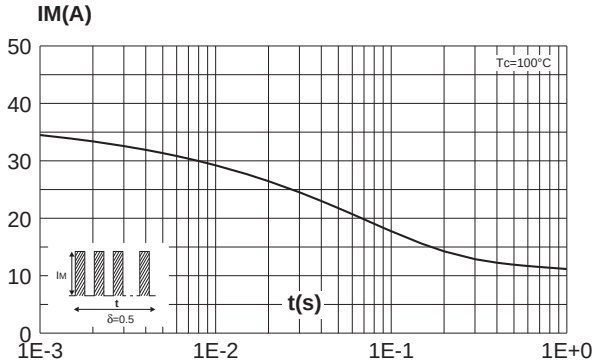

Fig. 4-2: Non repetitive surge peak forward current versus overload duration (ISOWATT220AC)

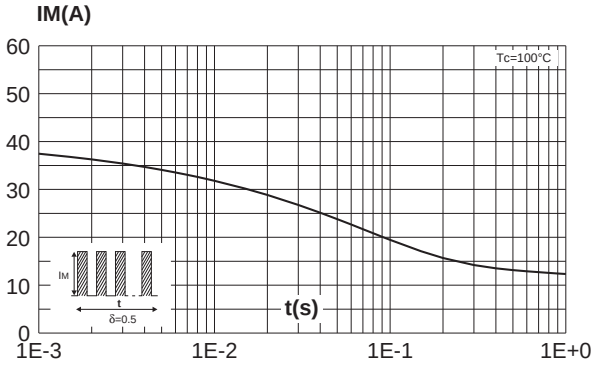

Fig. 4-3: Non repetitive surge peak forward current versus overload duration (TO-220AC)

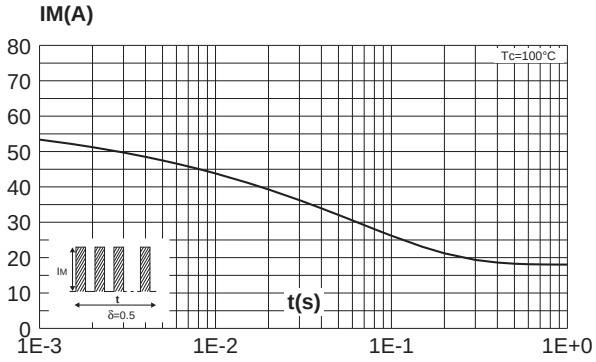

Fig. 5: Reverse recovery charges versus dIF/dt.

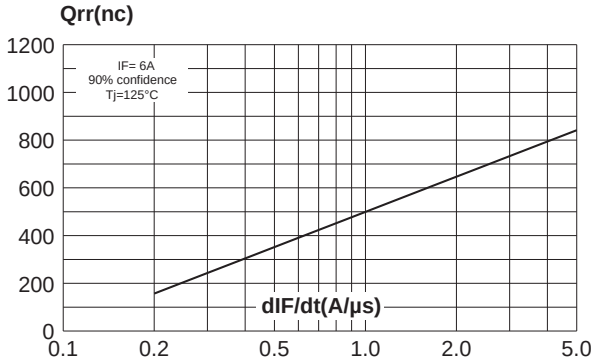

Fig. 6: Reverse recovery current versus dIF/dt.

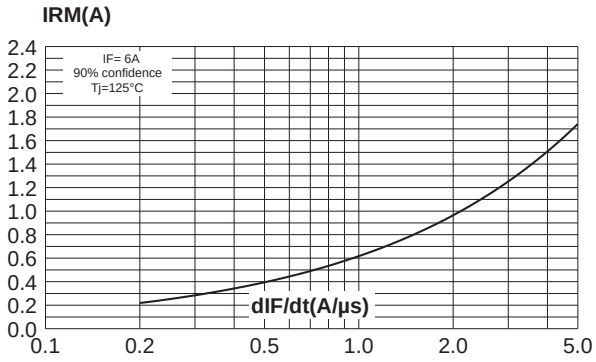

Fig. 7: Transient peak forward voltage versus dIF/dt.

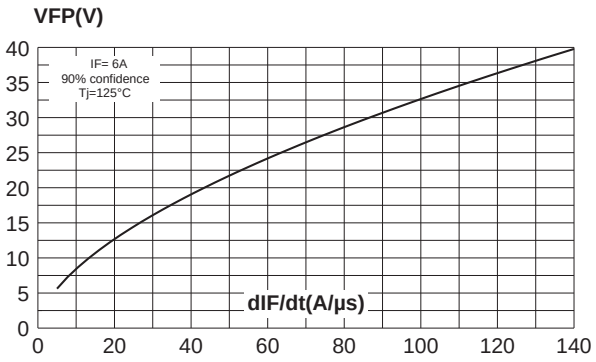

Fig. 8: Forward recovery time versus dIF/dt

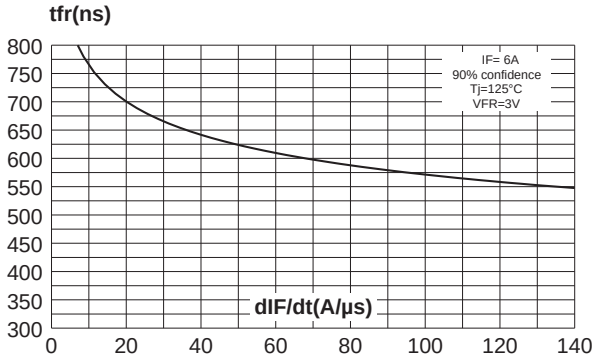

Fig. 9: Dynamic parameters versus junction temperature

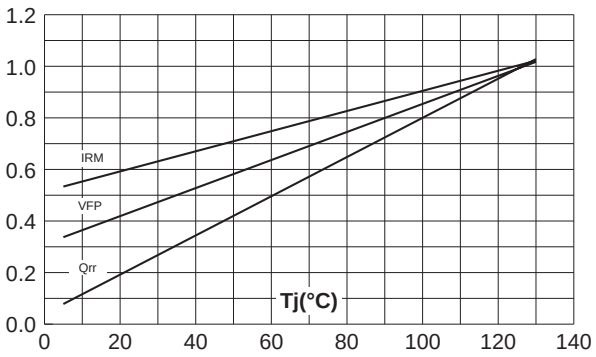

Fig. 10: Junction capacitance versus reverse voltage applied (typical values)

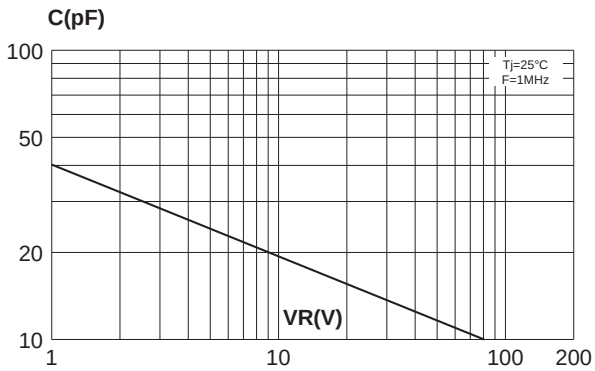

Fig. 11-1: Relative variation of thermal impedance junction to case versus pulse duration (ISOWATT220AC & TO-220FPAC)

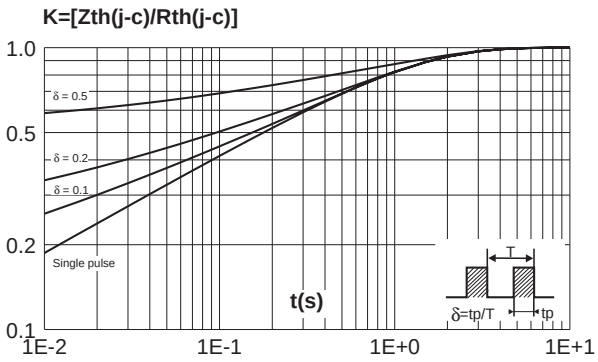

Fig. 11-2: Relative variation of thermal impedance junction to case versus pulse duration (TO-220AC)

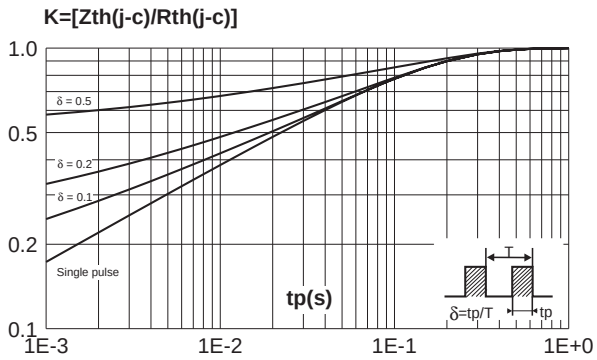

PACKAGE DATA
TO-220FPAC

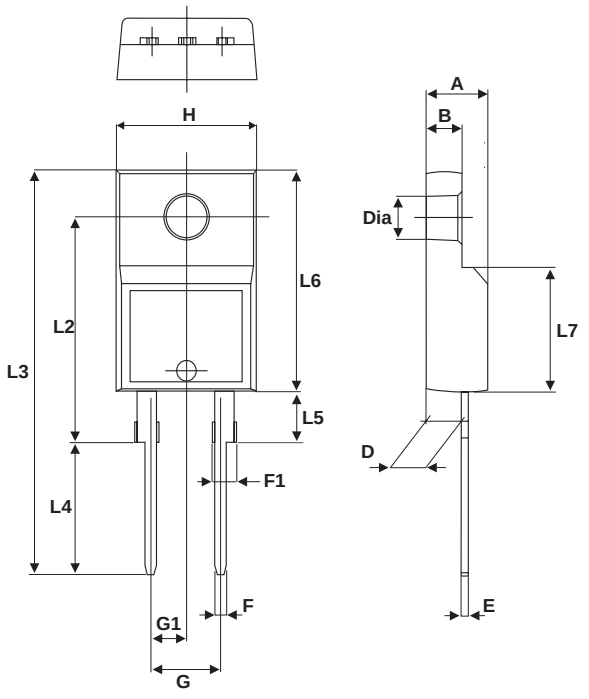

REF.	DIMENSIONS			
	Millimeters		Inches	
	Min.	Max.	Min.	Max.
A	4.4	4.6	0.173	0.181
B	2.5	2.7	0.098	0.106
D	2.5	2.75	0.098	0.108
E	0.45	0.70	0.018	0.027
F	0.75	1	0.030	0.039
F1	1.15	1.70	0.045	0.067
G	4.95	5.20	0.195	0.205
G1	2.4	2.7	0.094	0.106
H	10	10.4	0.393	0.409
L2	16 Typ.		0.63 Typ.	
L3	28.6	30.6	1.126	1.205
L4	9.8	10.6	0.386	0.417
L5	2.9	3.6	0.114	0.142
L6	15.9	16.4	0.626	0.646
L7	9.00	9.30	0.354	0.366
Dia.	3.00	3.20	0.118	0.126

PACKAGE DATA
ISOWATT220AC

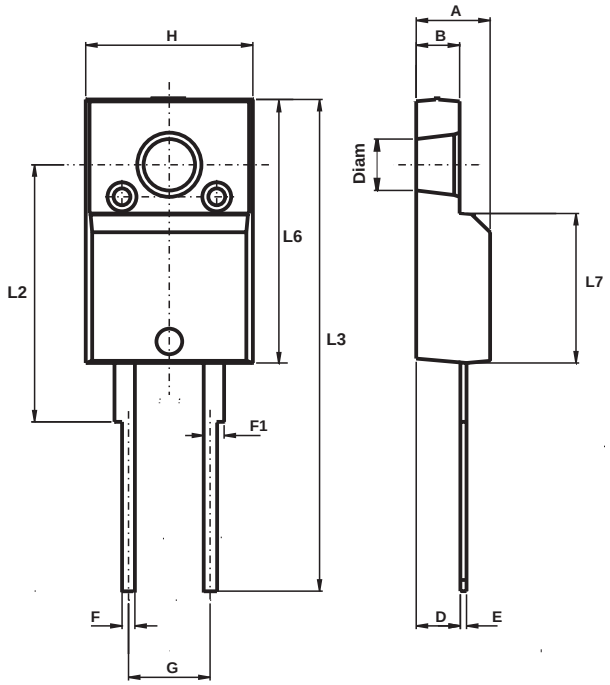

REF.	DIMENSIONS			
	Millimeters		Inches	
	Min.	Max.	Min.	Max.
A	4.40	4.60	0.173	0.181
B	2.50	2.70	0.098	0.106
D	2.40	2.75	0.094	0.108
E	0.40	0.70	0.016	0.028
F	0.75	1.00	0.030	0.039
F1	1.15	1.70	0.045	0.067
G	4.95	5.20	0.195	0.205
H	10.00	10.40	0.394	0.409
L2	16.00 Typ.		0.630 Typ.	
L3	28.60	30.60	1.125	1.205
L6	15.90	16.40	0.626	0.646
L7	9.00	9.30	0.354	0.366
Diam	3.00	3.20	0.118	0.126

PACKAGE DATA
TO-220AC

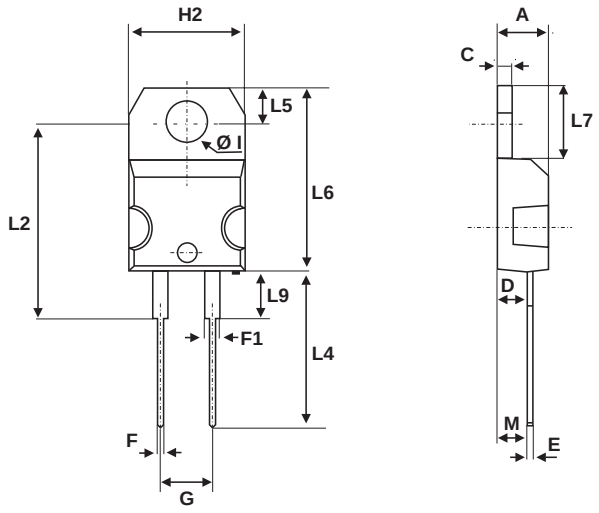

REF.	DIMENSIONS			
	Millimeters		Inches	
	Min.	Max.	Min.	Max.
A	4.40	4.60	0.173	0.181
C	1.23	1.32	0.048	0.051
D	2.40	2.72	0.094	0.107
E	0.49	0.70	0.019	0.027
F	0.61	0.88	0.024	0.034
F1	1.14	1.70	0.044	0.066
G	4.95	5.15	0.194	0.202
H2	10.00	10.40	0.393	0.409
L2	16.40 typ.		0.645 typ.	
L4	13.00	14.00	0.511	0.551
L5	2.65	2.95	0.104	0.116
L6	15.25	15.75	0.600	0.620
L7	6.20	6.60	0.244	0.259
L9	3.50	3.93	0.137	0.154
M	2.6 typ.		0.102 typ.	
Diam. I	3.75	3.85	0.147	0.151

Type	Marking	Package	Weight	Base qty	Delivery mode
DTV1500MFP	DTV1500MFP	TO-220FPAC	1.8g	50	Tube
DTV1500MD	DTV1500MD	TO-220AC	1.86g	50	Tube
DTV1500MF	DTV1500MF	ISOWATT220AC	2g	50	Tube

- Cooling method: C
- Epoxy meets UL94-V0
- Torquevalue: 0.55 m.Ntyp (0.7m.Nmax)
- Electrical Isolation: 2000V DC
- Capacitance: 12pF

Information furnished is believed to be accurate and reliable. However, STMicroelectronics assumes no responsibility for the consequences of use of such information nor for any infringement of patents or other rights of third parties which may result from its use. No license is granted by implication or otherwise under any patent or patent rights of STMicroelectronics. Specifications mentioned in this publication are subject to change without notice. This publication supersedes and replaces all information previously supplied.
STMicroelectronics products are not authorized for use as critical components in life support devices or systems without express written approval of STMicroelectronics.

The ST logo is a registered trademark of STMicroelectronics

© 2002 STMicroelectronics - Printed in Italy - All rights reserved.

STMicroelectronics GROUP OF COMPANIES
Australia - Brazil - Canada - China - Finland - France - Germany
Hong Kong - India - Israel - Italy - Japan - Malaysia - Malta - Morocco - Singapore
Spain - Sweden - Switzerland - United Kingdom - United States.

http://www.st.com