SAN PU SEMICONDUCTOR

# SPS E13007-2

## HIGH VOLTAGE POWER TRANSISTOR

**FEATURES:** High Voltage Capability
High Speed Switching
Wide SOA

**APPLICATIONS:** Flourscent Lamp
Electronic Ballast
Electronic Transformer

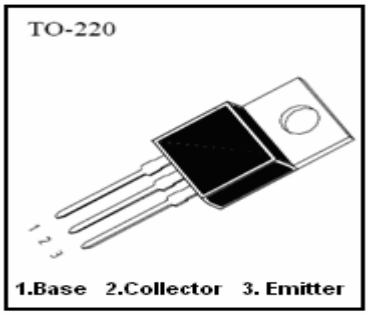


**LIMMITING VALUES($T_j$=25℃ Unless OtherWise Stated )**

| Parameter | Symbol | Value | Unit |
|---|---|---|---|
| Collector-Base Voltage | $V_{CBO}$ | 700 | V |
| Collector-Emitter Voltage | $V_{CEO}$ | 400 | V |
| Emitter-Base Voltage | $V_{EBO}$ | 9 | V |
| Collector Current | $I_C$ | 8 | A |
| Total Power Dissipattion | $P_C$ | 80 | W |
| Storage Temperature | $T_{stg}$ | -65～150 | ℃ |
| Junction Temperature | $T_j$ | 150 | ℃ |

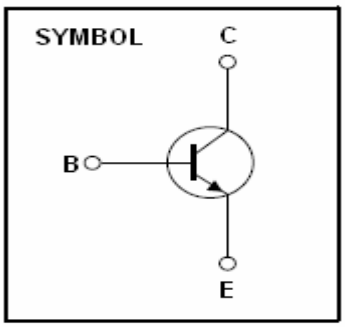


**ELECTRICAL CHARACTERISTICS (Tj=25℃ Unless Otherwise Stated)**

| Parameter | Symbol | Test conditions | Min | Max | Unit |
|---|---|---|---|---|---|
| Collector-Base Breakdown Voltage | $BV_{CBO}$ | $I_c$=0.5mA,$I_e$=0 | 700 | | V |
| Collector-Emitter Breakdown Voltage | $BV_{CEO}$ | $I_c$=10mA,$I_b$=0 | 400 | | V |
| Emitter-Base Breakdown Voltage | $BV_{EBO}$ | $I_e$=1mA,$I_c$=0 | 9 | | V |
| Collector-Base Cutoff Current | $I_{CBO}$ | $V_{cb}$=650V, $I_e$=0 | | 10 | μ A |
| Collector-Emitter Cutoff Current | $I_{CEO}$ | $V_{ce}$=400V, $I_b$=0 | | 20 | μ A |
| Emitter-Base Cutoff Current | $I_{EBO}$ | $V_{eb}$=9V, $I_c$=0 | | 20 | μ A |
| DC Current Gain | hFE(1) | $V_{ce}$=5V,$I_c$=2A | 10 | 40 | |
| DC Current Gain | hFE(2) | $V_{ce}$=5V,$I_c$=1mA | 9 | | |
| Collector-Emitter Saturation Voltage | $V_{CE(sat)}$ | $I_c$=2.0A,$I_b$=0.4A | | 0.7 | V |
| | | $I_c$=5.0A,$I_b$=1.0A | | 1.5 | |
| | | $I_c$=8.0A,$I_b$=2.0A | | 3.0 | |
| Base-Emitter Saturation Voltage | $V_{BE(sat)}$ | $I_c$=5.0A,$I_b$=1.0A | | 1.2 | V |
| Storage Time | $T_s$ | $V_{CC}$=250V<br>$I_C$=5$I_B$<br>$I_{B1}$=- $I_{B2}$=1A | | 4 | uS |
| Falling Time | $T_f$ | | | 0.8 | |



www.DataSheet4U.com

SAN PU SEMICONDUCTOR

# SPS E13007-2

## HIGH VOLTAGE POWER TRANSISTOR

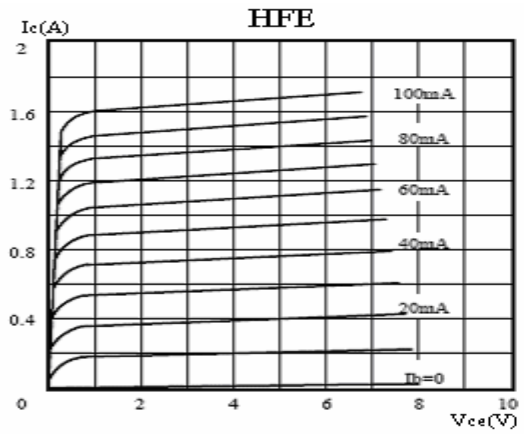


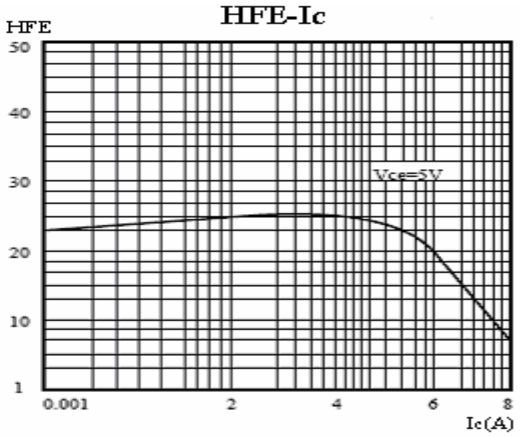


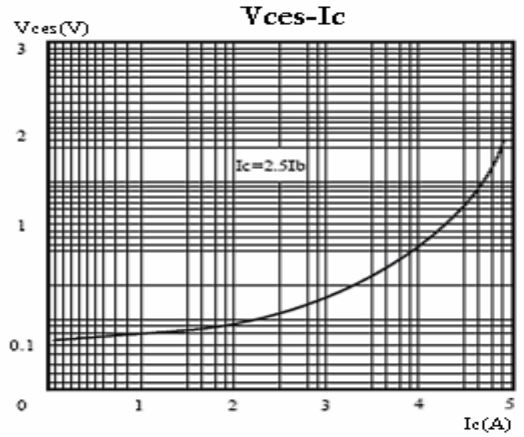


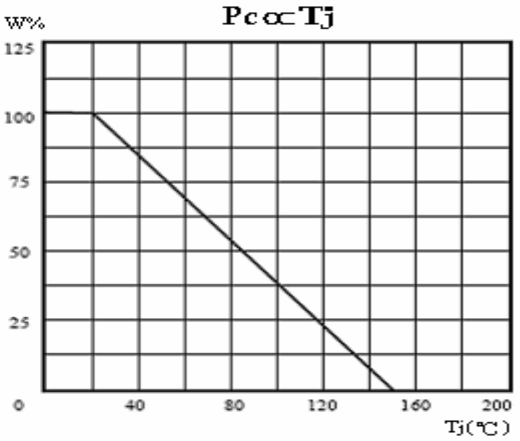


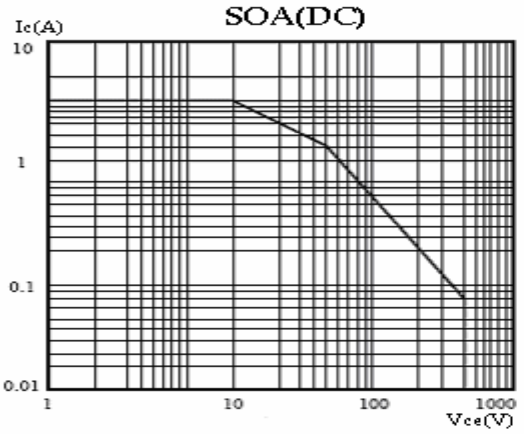




www.DataSheet4U.com

**SAN PU SEMICONDUCTOR**

# SPS E13007-2

HIGH VOLTAGE POWER TRANSISTOR

TO-220 MECHANICAL DATA

UNIT: mm

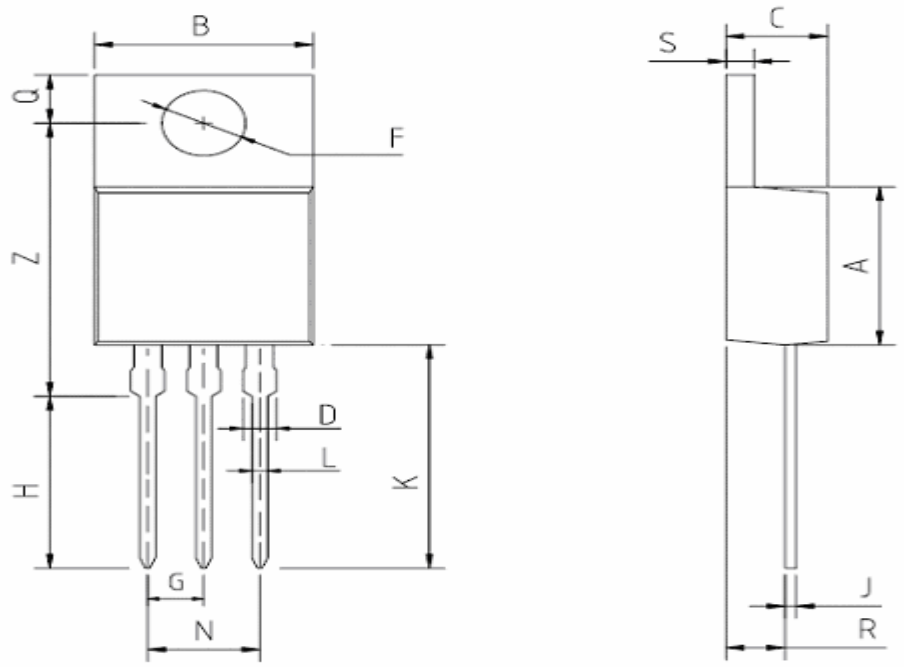


| SYMBOL | Min | Nom | Max |
|---|---|---|---|
| A | 8.8 | 9 | 9.2 |
| B | 9.5 | 10 | 10.5 |
| C | 4.2 | 4.5 | 4.8 |
| D | 1.2 | 1.25 | 1.3 |
| F | φ3.4 | φ3.6 | φ3.8 |
| G | | 2.54 | |
| H | 9.5 | 10 | 10.5 |
| J | 0.43 | 0.45 | 0.47 |
| K | 13 | 13.5 | 14 |
| L | 0.75 | 0.8 | 0.85 |
| N | | 5.08 | |
| P | | | |
| Q | 2.7 | 2.8 | 2.9 |
| R | 2.7 | 2.75 | 2.8 |
| S | 1.2 | 1.25 | 1.3 |
| Z | 15.7 | 15.9 | 16.1 |



www.DataSheet4U.com