1.6X Linear Fan Driver with VO Fully On Control

Features

- **VO Follows 1.6 Times of VSET**
- **150mV Dropout @ 0.5A**
- **Over Current and Over Temperature Protection**
- **$\overline{\text{FON}}$ Pin to Turn VO Fully On**
- **Power SOP-8 Package**

Applications

- **Notebook Computer Fan Driver**
- **Battery Powered Systems**
- **Motherboards**
- **Peripheral Cards**

General Description

The G991 is a high performance positive voltage regulator designed for use in applications requiring very low dropout voltage at up to 0.5 Amps. The G991 VO output voltage follows the 1.6 times of VSET voltage until it reaches VIN voltage. The VSET voltage must be larger than 1V to guarantee VO 1.6 times of VSET. An $\overline{\text{FON}}$ pin turns V_O output fully on when given low. The G991 provides excellent regulation over variations in line, load and temperature.

The G991 is available in the power SOP-8 package.

Ordering Information

ORDER NUMBER	MARKING	TEMP. RANGE	PACKAGE (Green)
G991P11U	G991	-40°C ~ +85°C	SOP-8

Note: P1: SOP-8
1: Bonding Code
U: Tape & Reel

Pin Configuration

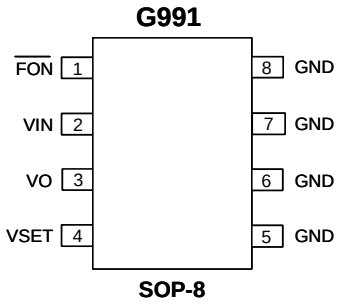

Typical Application Circuit

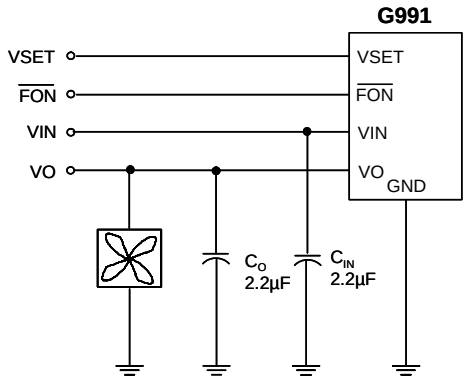

VO =1.6 X VSET