DOS Electronics Pte Ltd

3-Terminals Positive Voltage Regulator Series HT8Lxx

General Description

The HT78Lxx series of fixed voltage monolithic integrated circuit voltage regulators are suitable for applications that required supply up to 100mA.

TO-92

Feature

- Maximum output current of 100mA
- Output voltage of 5V, 6V, 8V, 9V, 10V, 12V,15V and 24V
- Thermal overload protection
- Short circuit current limiting

Equivalent Circuit

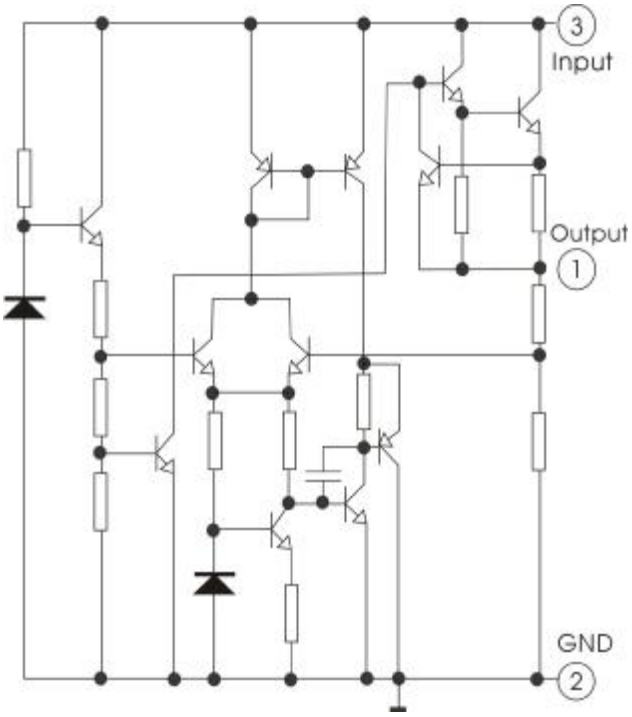

Absolute Maximum Ratings *(Operating temperature range applies unless otherwise specified)*

Characteristic		*Symbol*	*Value*	*Unit*
Input Voltage	Vo=5V~8V	Vi	30	V
	Vo=12V~15V		35	
Operating Junction Temperature Range		Topr	-20~120	℃
Storage Temperature Range		Tstg	-55~150	℃

HT78L05 Electrical Characteridtics

(Unless otherwise specified: Vi=10V; Io=40mA; C1=0.33μF; Co=0.1μF, 0<Tj<125℃)(Note 1)

Characteristics	*Test conditions*	*Symbol*	*Min.*	*Typ.*	*Max.*	*Unit*
Output Voltage	Tj=25℃	Vo	4.8	5.0	5.2	V
	7V≤Vi≤20V; Io=1mA~40mA		4.75		5.25	V
	7V≤Vi≤Vmax; Io=1mA~70mA		4.75		5.25	V (note2)
Load Regulation	Tj=25℃; Io=1mA~100mA	ΔVo		11	60	mV
	Tj=25℃; Io=1mA~40mA			5.0	30	mV
Line Regulation	Tj=25℃; 7V≤Vi≤20V	ΔVo		8	150	mV
	Tj=25℃; 8V≤Vi≤20V			6	100	mV
Quiescent Current		.Iq		2.0	5.5	mA
Quiescent Current Change	8V≤Vi≤20V	ΔIq			1.5	mA
	1mA≤Io≤40mA				0.1	mA
Output Noise Voltage	10Hz≤ f ≤100kHz	VN		40		μV
Temperature Coefficient of Vo	Io=5mA	$\Delta V_0/\Delta T$		-0.65		mV/℃
Ripple Rejection	10V≤Vi≤20V; f=120Hz; Tj=25℃	RR	41	80		dB
Dropout Voltage	Tj=25℃	Vd		1.7		V

HT78L06 Electrical Characteridtics

(Unless otherwise specified: Vi=12V; Io=40mA; C1=0.33μF; Co=0.1μF, 0<Tj<125℃)(Note 1)

Characteristics	*Test conditions*	*Symbol*	*Min.*	*Typ.*	*Max.*	*Unit*
Output Voltage	Tj=25℃	Vo	5.75	6.0	6.25	V
	8.5V≤Vi≤20V; Io=1mA~40mA		5.7		6.3	V
	8.5V≤Vi≤Vmax; Io=1mA~70mA		5.7		6.3	V (note2)
Load Regulation	Tj=25℃; Io=1mA~100mA	ΔVo		12.8	80	mV
	Tj=25℃ Io=1mA~40mA			5.8	40	mV
Line Regulation	Tj=25℃; 8.5V≤Vi≤20V	ΔVo		64	175	mV
	Tj=25℃; 9V≤Vi≤20V			54	125	mV
Quiescent Current		.Iq		3.9	6.0	mA
Quiescent Current Change	9V≤Vi≤20V	ΔIq			1.5	mA
	1mA≤Io≤40mA				0.1	mA
Output Noise Voltage	10Hz≤ f ≤100kHz	VN		49		μV
Temperature Coefficient of Vo	Io=5mA	$\Delta V_0/\Delta T$		-0.75		mV/℃
Ripple Rejection	10V≤Vi≤20V; f=120Hz; Tj=25℃	RR	40	46		dB
Dropout Voltage	Tj=25℃	Vd		1.7		V

HT78L08 Electrical Characteridtics

(Unless otherwise specified: Vi=14V; Io=40mA; C1=0.33μF; Co=0.1μF, 0<Tj<125℃)(Note 1)

Characteristics	***Test conditions***	***Symbol***	***Min.***	***Typ.***	***Max.***	***Unit***
Output Voltage	Tj=25℃	Vo	7.7	8.0	8.3	V
	10.5V≤Vi≤23V; Io=1mA~40mA		7.6		8.4	V
	10.5V≤Vi≤Vmax; Io=1mA~70mA		7.6		8.4	V (note2)
Load Regulation	Tj=25℃; Io=1mA~100mA	ΔVo		15	80	mV
	Tj=25℃ Io=1mA~40mA			8.0	40	mV
Line Regulation	Tj=25℃; 10.5V≤Vi≤23V	ΔVo		10	175	mV
	Tj=25℃; 11V≤Vi≤23V			8	125	mV
Quiescent Current		.Iq		2.0	5.5	mA
Quiescent Current Change	11V≤Vi≤23V	ΔIq			1.5	mA
	1mA≤Io≤40mA				0.1	mA
Output Noise Voltage	10Hz≤ f ≤100kHz	VN		49		μV
Temperature Coefficient of Vo	Io=5mA	$\Delta V_0/\Delta T$		-0.75		mV/℃
Ripple Rejection	11V≤Vi≤23V; f=120Hz; Tj=25℃	RR	39	70		dB
Dropout Voltage	Tj=25℃	Vd		1.7		V

HT78L09 Electrical Characteridtics

(Unless otherwise specified: Vi=15V; Io=40mA; C1=0.33μF; Co=0.1μF, 0<Tj<125℃)(Note 1)

Characteristics	***Test conditions***	***Symbol***	***Min.***	***Typ.***	***Max.***	***Unit***
Output Voltage	Tj=25℃	Vo	8.64	9.0	9.36	V
	11.5V≤Vi≤24V; Io=1mA~40mA		8.55		9.45	V
	11.5V≤Vi≤Vmax; Io=1mA~70mA		8.55		9.45	V (note2)
Load Regulation	Tj=25℃; Io=1mA~100mA	ΔVo		20	90	mV
	Tj=25℃ Io=1mA~40mA			10	45	mV
Line Regulation	Tj=25℃; 11.5V≤Vi≤24V	ΔVo		90	200	mV
	Tj=25℃; 13V≤Vi≤24V			100	150	mV
Quiescent Current		.Iq		2.0	6.0	mA
Quiescent Current Change	13V≤Vi≤24V	ΔIq			1.5	mA
	1mA≤Io≤40mA				0.1	mA
Output Noise Voltage	10Hz≤ f ≤100kHz	VN		49		μV
Temperature Coefficient of Vo	Io=5mA	$\Delta V_0/\Delta T$		-0.75		mV/℃
Ripple Rejection	12V≤Vi≤23V; f=120Hz; Tj=25℃	RR	38	44		dB
Dropout Voltage	Tj=25℃	Vd		1.7		V

HT78L10 Electrical Characteridtics

(Unless otherwise specified: Vi=16V; Io=40mA; C1=0.33μF; Co=0.1μF, 0<Tj<125℃)(Note 1)

Characteristics	*Test conditions*	*Symbol*	*Min.*	*Typ.*	*Max.*	*Unit*
Output Voltage	Tj=25℃	Vo	9.6	10	10.4	V
	12.5V≤Vi≤23V; Io=1mA~40mA		9.5		10.5	V
	12.5V≤Vi≤Vmax; Io=1mA~70mA		9.5		10.5	V (note2)
Load Regulation	Tj=25℃; Io=1mA~100mA	ΔVo		20	94	mV
	Tj=25℃ Io=1mA~40mA			10	47	mV
Line Regulation	Tj=25℃; 12.5V≤Vi≤23V	ΔVo		100	220	mV
	Tj=25℃; 14V≤Vi≤23V			200	170	mV
Quiescent Current		.Iq		4.2	6.5	mA
Quiescent Current Change	12.5V≤Vi≤23V	ΔIq			1.5	mA
	1mA≤Io≤40mA				0.1	mA
Output Noise Voltage	10Hz≤ f ≤100kHz	VN		74		μV
Temperature Coefficient of Vo	Io=5mA	$\Delta V_0/\Delta T$		-0.95		mV/℃
Ripple Rejection	15V≤Vi≤23V; f=120Hz; Tj=25℃	RR	38	43		dB
Dropout Voltage	Tj=25℃	Vd		1.7		V

HT78L12 Electrical Characteridtics

(Unless otherwise specified: Vi=19V; Io=40mA; C1=0.33μF; Co=0.1μF, 0<Tj<125℃)(Note 1)

Characteristics	*Test conditions*	*Symbol*	*Min.*	*Typ.*	*Max.*	*Unit*
Output Voltage	Tj=25℃	Vo	11.5	15	15.6	V
	14.5V≤Vi≤27V; Io=1mA~40mA		11.4		12.6	V
	14.5V≤Vi≤Vmax; Io=1mA~70mA		11.4		12.6	V (note2)
Load Regulation	Tj=25℃; Io=1mA~100mA	ΔVo		25	150	mV
	Tj=25℃ Io=1mA~40mA			12	75	mV
Line Regulation	Tj=25℃; 14.5V≤Vi≤27V	ΔVo		25	300	mV
	Tj=25℃; 16V≤Vi≤27V			20	250	mV
Quiescent Current		.Iq		2.0	6.0	mA
Quiescent Current Change	16V≤Vi≤27V	ΔIq			1.5	mA
	1mA≤Io≤40mA				0.1	mA
Output Noise Voltage	10Hz≤ f ≤100kHz	VN		80		μV
Temperature Coefficient of Vo	Io=5mA	$\Delta V_0/\Delta T$		-1.0		mV/℃
Ripple Rejection	15V≤Vi≤25V; f=120Hz; Tj=25℃	RR	37	65		dB
Dropout Voltage	Tj=25℃	Vd		1.7		V

HT78L15 Electrical Characteridtics

(Unless otherwise specified: Vi=23V; Io=40mA; C1=0.33μF; Co=0.1μF, 0<Tj<125℃)(Note 1)

Characteristics	*Test conditions*	*Symbol*	*Min.*	*Typ.*	*Max.*	*Unit*
Output Voltage	Tj=25℃	Vo	14.4	15	15.6	V
	17.5V≤Vi≤30V; Io=1mA~40mA		14.25		15.75	V
	17.5V≤Vi≤Vmax; Io=1mA~70mA		14.25		15.75	V (note2)
Load Regulation	Tj=25℃; Io=1mA~100mA	ΔVo		20	150	mV
	Tj=25℃ Io=1mA~40mA			25	150	mV
Line Regulation	Tj=25℃; 17.5V≤Vi≤30V	ΔVo		25	150	mV
	Tj=25℃; 20V≤Vi≤30V			15	75	mV
Quiescent Current		.Iq		2.2	6.5	mA
Quiescent Current Change	20V≤Vi≤30V	ΔIq			1.5	mA
	1mA≤Io≤40mA				0.1	mA
Output Noise Voltage	10Hz≤ f ≤100kHz	VN		90		μV
Temperature Coefficient of Vo	Io=5mA	$\Delta V_0/\Delta T$		-1.3		mV/℃
Ripple Rejection	18.5V≤Vi≤28.5V; f=120Hz; Tj=25℃	RR	34	63		dB
Dropout Voltage	Tj=25℃	Vd		1.7		V

HT78L18 Electrical Characteridtics

(Unless otherwise specified: Vi=27V; Io=40mA; C1=0.33μF; Co=0.1μF, 0<Tj<125℃)(Note 1)

Characteristics	*Test conditions*	*Symbol*	*Min.*	*Typ.*	*Max.*	*Unit*
Output Voltage	Tj=25℃	Vo	17.3	18	18.7	V
	21V≤Vi≤33V; Io=1mA~40mA		17.1		18.9	V
	21V≤Vi≤Vmax; Io=1mA~70mA		17.1		18.9	V (note2)
Load Regulation	Tj=25℃; Io=1mA~100mA	ΔVo		30	170	mV
	Tj=25℃ Io=1mA~40mA			15	85	mV
Line Regulation	Tj=25℃; 21V≤Vi≤33V	ΔVo		145	300	mV
	Tj=25℃; 22V≤Vi≤33V			135	250	mV
Quiescent Current		.Iq		2.0	6.0	mA
Quiescent Current Change	21V≤Vi≤33V	ΔIq			1.5	mA
	1mA≤Io≤40mA				0.1	mA
Output Noise Voltage	10Hz≤ f ≤100kHz	VN		150		μV
Temperature Coefficient of Vo	Io=5mA	$\Delta V_0/\Delta T$		-1.8		mV/℃
Ripple Rejection	23V≤Vi≤33V; f=120Hz; Tj=25℃	RR	34	48		dB
Dropout Voltage	Tj=25℃	Vd		1.7		V

HT78L24 Electrical Characteridtics

(Unless otherwise specified: Vi=33V; Io=40mA; C1=0.33μF; Co=0.1μF, 0<Tj<125℃)(Note 1)

Characteristics	*Test conditions*	*Symbol*	*Min.*	*Typ.*	*Max.*	*Unit*
Output Voltage	Tj=25℃	Vo	23	24	25	V
	27V≤Vi≤38V; Io=1mA~40mA		22.8		25.2	V
	27V≤Vi≤Vmax; Io=1mA~70mA		22.8		25.2	V (note2)
Load Regulation	Tj=25℃; Io=1mA~100mA	ΔVo		40	200	mV
	Tj=25℃ Io=1mA~40mA			20	100	mV
Line Regulation	Tj=25℃; 27V≤Vi≤38V	ΔVo		160	300	mV
	Tj=25℃; 28V≤Vi≤38V			150	250	mV
Quiescent Current		.Iq		2.2	6.0	mA
Quiescent Current Change	27V≤Vi≤38V	ΔIq			1.5	mA
	1mA≤Io≤40mA				0.1	mA
Output Noise Voltage	10Hz≤ f ≤100kHz	VN		200		μV
Temperature Coefficient of Vo	Io=5mA	$\Delta V_0/\Delta T$		-2.0		mV/℃
Ripple Rejection	27V≤Vi≤38V; f=120Hz; Tj=25℃	RR	34	45		dB
Dropout Voltage	Tj=25℃	Vd		1.7		V

Note 1: The Maximum steady state usable output current and input voltage are very dependent on the heating sinking and/or lead temperature length of the package. The data above represent pulse test conditions with junction temperatures as indicated at the initiation of test.

Note 2: Power dissipation<0.75W

Typical Application Circuit

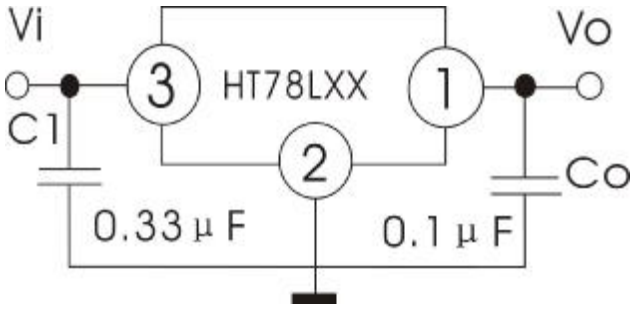

Note 1: To specify an output voltage, substitue voltage value for "xx".

Note 2: Bypass capacitors are recommended for optimum stability and transient response and should be located as close as possible to the regulators.