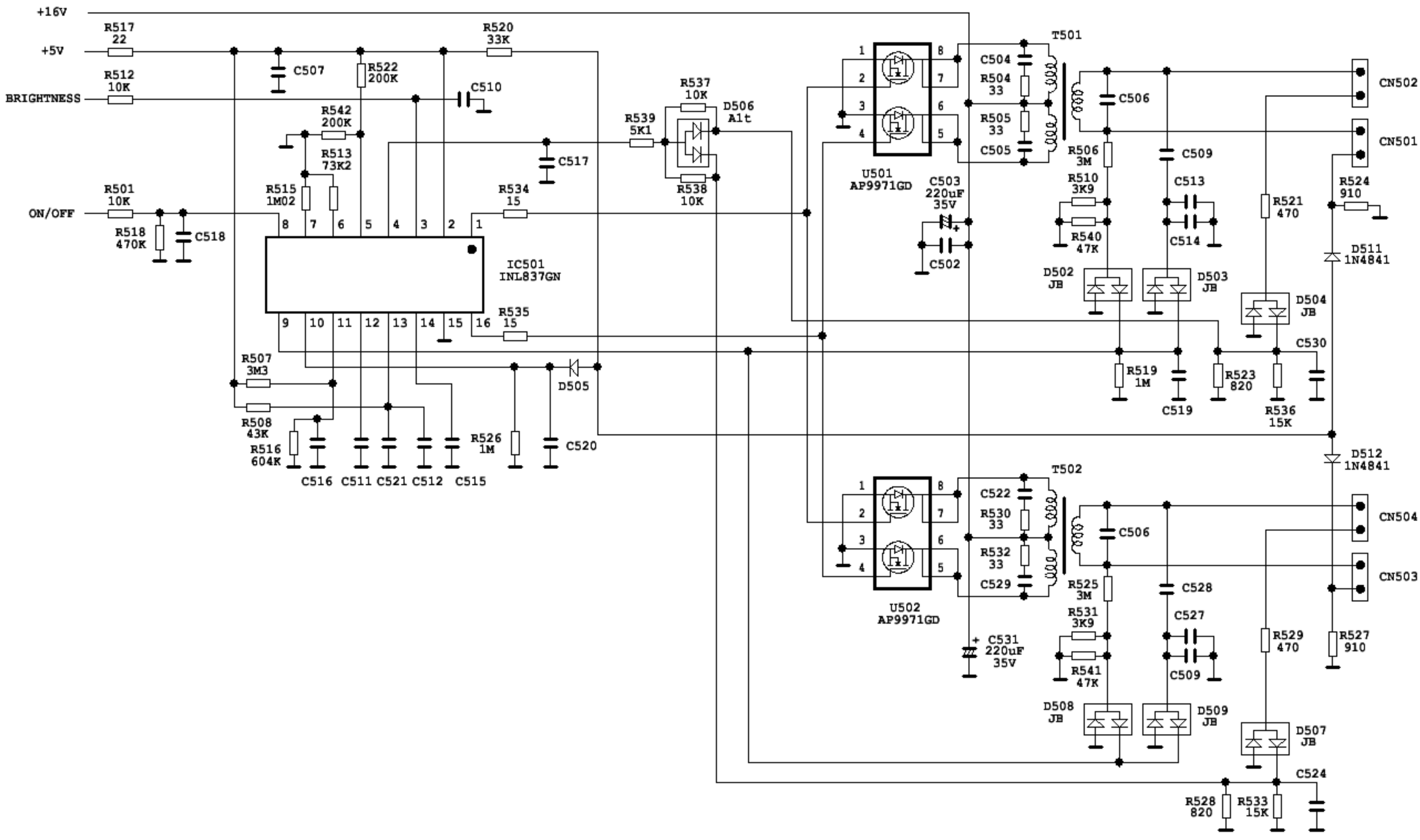
+16V
+5V
BRIGHTNESS
ON/OFF
R517 22
R512 10K
R501 10K
R518 470K
C518
C507
R522 200K
R520 33K
C510
R542 200K
R513 73K2
R515 1M02
C517
R534 15
R539 5K1
R537 10K
D506 A1t
R538 10K
IC501 INL837GN
R535 15
R507 3M3
R508 43K
R516 604K
C516 C511 C521 C512 C515
D505
R526 1M
C520
U501 AP9971GD
C503 220uF 35V
C502
T501
C504
R504 33
R505 33
C505
C506
R506 3M
R510 3K9
R540 47K
C509
C513
C514
D502 JB
D503 JB
D504 JB
R521 470
R524 910
D511 1N4841
CN502
CN501
C530
R519 1M
C519
R523 820
R536 15K
D512 1N4841
T502
C522
R530 33
R532 33
C529
U502 AP9971GD
C531 220uF 35V
R525 3M
R531 3K9
R541 47K
C528
C527
C509
D508 JB
D509 JB
R529 470
R527 910
CN504
CN503
D507 JB
C524
R528 820
R533 15K

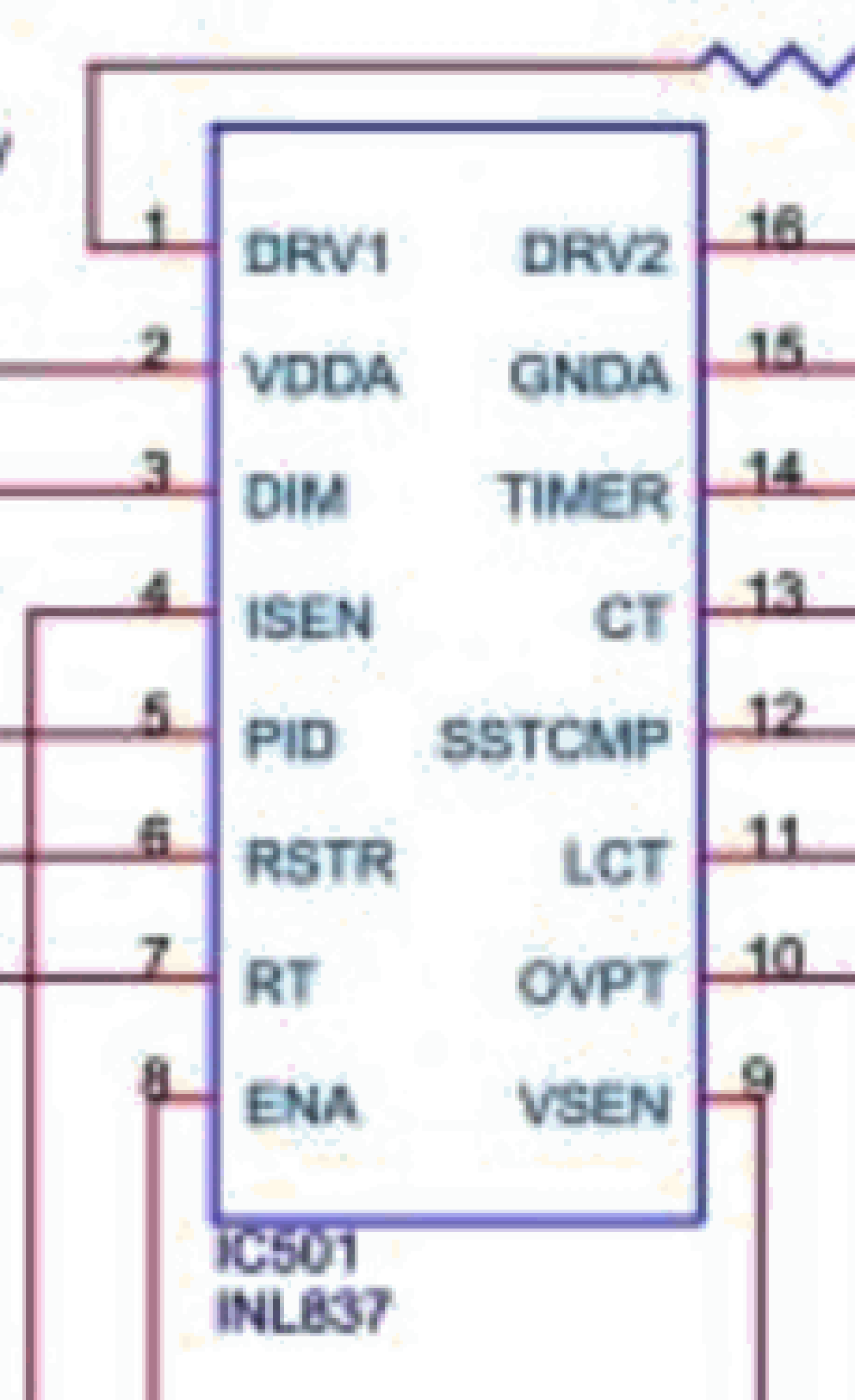
1
DRV1
2
VDDA
3
DIM
4
ISEN
5
PID
6
RSTR
7
RT
8
ENA
16
DRV2
15
GNDA
14
TIMER
13
CT
12
SSTCMP
11
LCT
10
OVPT
9
VSEN
IC501
INL837