3 TERMINAL LOW DROP VOLTAGE REGULATOR

The KIA78D××× Series are Low Dropout Voltage Regulator suitable for various electronic equipments.

The Regulator has multi function such as over current protection, overheat protection.

FEATURES

- 1.0A Output Low Drop Voltage Regulator.
- Bulit in Over Current Protection, Over Heat Protetion Function.
- Low Quiescent Current :0.8mA (Typ.)

LINE UP

ITEM	OUTPUT VOLTAGE (Typ.)	UNIT
KIA78D015S/F	1.5	S : SOT-223 F : DPAK
KIA78D018S/F	1.8	
KIA78D020S/F	2.0	
KIA78D025S/F	2.5	
KIA78D030S/F	3.0	
KIA78D033S/F	3.3	
KIA78D050S/F	5.0	
* KIA78D015PI	1.5	PI : TO-220IS
* KIA78D018PI	1.8	
* KIA78D020PI	2.0	
* KIA78D025PI	2.5	
* KIA78D030PI	3.0	
* KIA78D033PI	3.3	
* KIA78D050PI	5.0	

* : Under Development.

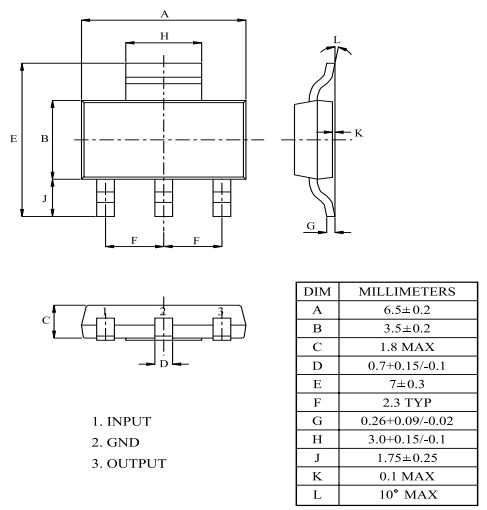

DIM	MILLIMETERS
A	6.5±0.2
B	3.5±0.2
C	1.8 MAX
D	0.7+0.15/-0.1
E	7±0.3
F	2.3 TYP
G	0.26+0.09/-0.02
H	3.0+0.15/-0.1
J	1.75±0.25
K	0.1 MAX
L	10° MAX

SOT-223

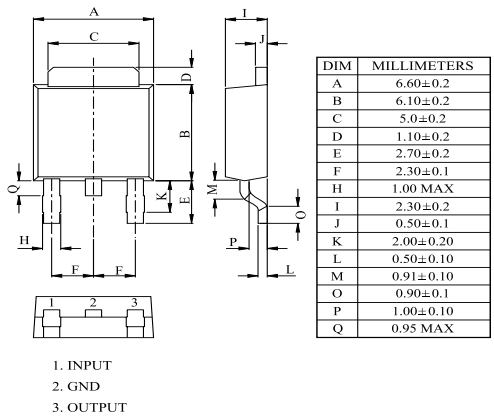

DIM	MILLIMETERS
A	6.60±0.2
B	6.10±0.2
C	5.0±0.2
D	1.10±0.2
E	2.70±0.2
F	2.30±0.1
H	1.00 MAX
I	2.30±0.2
J	0.50±0.1
K	2.00±0.20
L	0.50±0.10
M	0.91±0.10
O	0.90±0.1
P	1.00±0.10
Q	0.95 MAX

DPAK

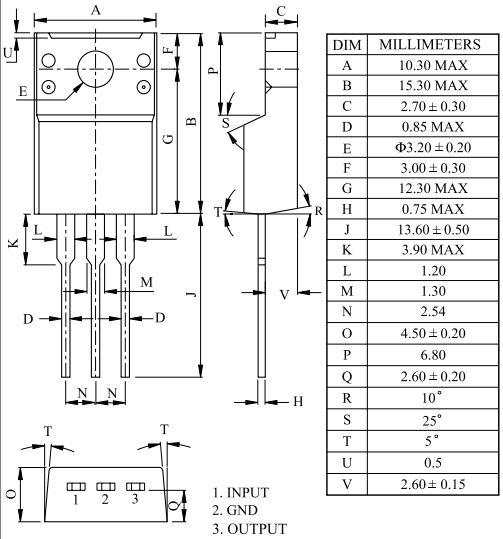

DIM	MILLIMETERS
A	10.30 MAX
B	15.30 MAX
C	2.70 ± 0.30
D	0.85 MAX
E	Φ3.20 ± 0.20
F	3.00 ± 0.30
G	12.30 MAX
H	0.75 MAX
J	13.60 ± 0.50
K	3.90 MAX
L	1.20
M	1.30
N	2.54
O	4.50 ± 0.20
P	6.80
Q	2.60 ± 0.20
R	10°
S	25°
T	5°
U	0.5
V	2.60 ± 0.15

TO-220IS

MAXIMUM RATINGS (Ta=25℃)

CHARACTERISTIC		SYMBOL	RATING	UNIT
Input Voltage		V_{IN}	16	V
Output Current		I_{OUT}	1	A
Power Dissipation-1 (No Heatsink)	S (Note)	P_{D1}	1.0	W
	F		1.3	
	PI		2.0	
Power Dissipation-2 (Infinite Heatsink)	S	P_{D2}	8.3	W
	F		13	
	PI		20.8	
Junction Temperature		T_j	150	℃
Operating Temperature		T_{opr}	-20~80	℃
Storage Temperature		T_{stg}	-30~150	℃
Soldering Temperature		T_{sol}	260	℃

Note) Package Mounted on FR-4 PCB 36×18×1.5㎜³ : mounting pad for the GND Lead min. 6㎜²

BLOCK DIAGRAM

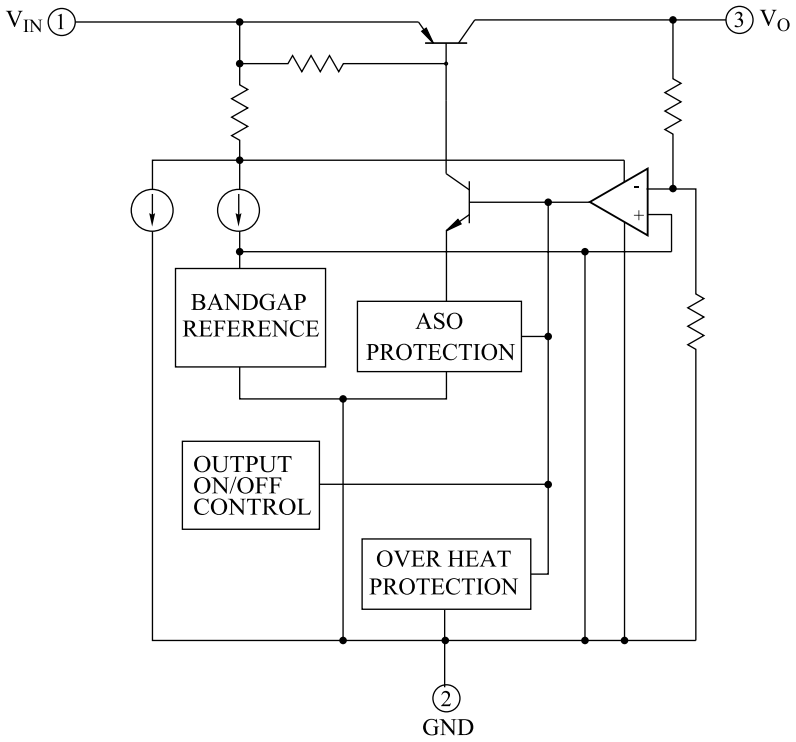

ELECTRICAL CHARACTERISTICS

KIA78D015S/F/PI (Unless otherwise specified, V_{IN}=3.8V, Tj=25℃)

CHARACTERISTIC	SYMBOL	CONDITIONS	MIN.	TYP.	MAX.	UNIT
Output Voltage	V_{OUT}	V_{IN}=3.8V, I_{OUT}=0.5A	1.45	1.5	1.55	V
		2.8V≦V_{IN}≦12V, 5mA≦I_{OUT}≦1A, 0℃≦Tj≦125℃	1.434	1.5	1.566	
Line Regulation	Reg Line	2.8V≦V_{IN}≦12V, I_{OUT}=0.5A	-	5	20	mV
Load Regulation	Reg Load	V_{IN}=3.8V, 5mA≦I_{OUT}≦1A	-	5	20	mV
Quiescent Current	I_B	2.8V≦V_{IN}≦12V, I_{OUT}=0A	-	0.8	1.8	mA
		2.8V≦V_{IN}≦12V, I_{OUT}=1A	-	10	20	
Starting Quiescent Current	I_{Bstart}	V_{IN}=2.1V, I_{OUT}=0A	-	0.7	5	mA
		V_{IN}=2.5V, I_{OUT}=1A	-	10	30	
Output Noise Voltage	V_{NO}	V_{IN}=3.8V, I_{OUT}=50mA, 10Hz≦f≦100kHz	-	75	-	μVrms
Ripple Rejection	R · R	2.8V≦V_{IN}≦12V, I_{OUT}=50mA, f=120Hz	53	65	-	dB
Dropout Voltage	V_D	I_{OUT}=0.5A	-	0.5	0.7	V
		I_{OUT}=1A	-	0.6	-	

ELECTRICAL CHARACTERISTICS

KIA78D018S/F/PI (Unless otherwise specified, V_{IN}=3.8V, Tj=25℃)

CHARACTERISTIC	SYMBOL	CONDITIONS	MIN.	TYP.	MAX.	UNIT
Output Voltage	V_{OUT}	V_{IN}=3.8V, I_{OUT}=0.5A	1.75	1.8	1.85	V
		2.8V≦V_{IN}≦12V, 5mA≦I_{OUT}≦1A, 0℃≦Tj≦125℃	1.732	1.8	1.868	
Line Regulation	Reg Line	2.8V≦V_{IN}≦12V, I_{OUT}=0.5A	-	5	20	mV
Load Regulation	Reg Load	V_{IN}=3.8V, 5mA≦I_{OUT}≦1A	-	5	20	mV
Quiescent Current	I_B	2.8V≦V_{IN}≦12V, I_{OUT}=0A	-	0.8	1.8	mA
		2.8V≦V_{IN}≦12V, I_{OUT}=1A	-	10	20	
Starting Quiescent Current	I_{Bstart}	V_{IN}=2.1V, I_{OUT}=0A	-	0.7	5	mA
		V_{IN}=2.5V, I_{OUT}=1A	-	10	30	
Output Noise Voltage	V_{NO}	V_{IN}=3.8V, I_{OUT}=50mA, 10Hz≦f≦100kHz	-	75	-	μVrms
Ripple Rejection	R · R	2.8V≦V_{IN}≦12V, I_{OUT}=50mA, f=120Hz	53	65	-	dB
Dropout Voltage	V_D	I_{OUT}=0.5A	-	0.3	0.5	V
		I_{OUT}=1A	-	0.5	-	

ELECTRICAL CHARACTERISTICS

KIA78D020S/F/PI (Unless otherwise specified, V_{IN}=4V, Tj=25℃)

CHARACTERISTIC	SYMBOL	CONDITIONS	MIN.	TYP.	MAX.	UNIT
Output Voltage	V_{OUT}	V_{IN}=4V, I_{OUT}=0.5A	1.95	2.0	2.05	V
		3V≦V_{IN}≦12V, 5mA≦I_{OUT}≦1A, 0℃≦Tj≦125℃	1.93	2.0	2.07	
Line Regulation	Reg Line	3.0V≦V_{IN}≦12V, I_{OUT}=0.5A	-	5	20	mV
Load Regulation	Reg Load	V_{IN}=4V, 5mA≦I_{OUT}≦1A	-	5	20	mV
Quiescent Current	I_B	3.0V≦V_{IN}≦12V, I_{OUT}=0A	-	0.8	1.8	mA
		3.0V≦V_{IN}≦12V, I_{OUT}=1A	-	10	20	
Starting Quiescent Current	I_{Bstart}	V_{IN}=2.1V, I_{OUT}=0A	-	0.7	5	mA
		V_{IN}=2.5V, I_{OUT}=1A	-	10	30	
Output Noise Voltage	V_{NO}	V_{IN}=4V, I_{OUT}=50mA, 10Hz≦f≦100kHz	-	80	-	μVrms
Ripple Rejection	R · R	3.0V≦V_{IN}≦12V, I_{OUT}=50mA, f=120Hz	52	65	-	dB
Dropout Voltage	V_D	I_{OUT}=0.5A	-	0.3	0.5	V
		I_{OUT}=1A	-	0.5	-	

ELECTRICAL CHARACTERISTICS

KIA78D025S/F/PI (Unless otherwise specified, V_{IN}=4.5V, Tj=25℃)

CHARACTERISTIC	SYMBOL	CONDITIONS	MIN.	TYP.	MAX.	UNIT
Output Voltage	V_{OUT}	V_{IN}=4.5V, I_{OUT}=0.5A	2.438	2.5	2.562	V
		3.5V≦V_{IN}≦12V, 5mA≦I_{OUT}≦1A, 0℃≦Tj≦125℃	2.412	2.5	2.588	
Line Regulation	Reg Line	3.5V≦V_{IN}≦12V, I_{OUT}=0.5A	-	5	20	mV
Load Regulation	Reg Load	V_{IN}=4.5V, 5mA≦I_{OUT}≦1A	-	5	20	mV
Quiescent Current	I_B	3.5V≦V_{IN}≦12V, I_{OUT}=0A	-	0.8	1.8	mA
		3.5V≦V_{IN}≦12V, I_{OUT}=1A	-	10	20	
Starting Quiescent Current	I_{Bstart}	V_{IN}=2.1V, I_{OUT}=0A	-	0.9	5	mA
		V_{IN}=2.7V, I_{OUT}=1A	-	12	30	
Output Noise Voltage	V_{NO}	V_{IN}=4.5V, I_{OUT}=50mA, 10Hz≦f≦100kHz	-	95	-	μVrms
Ripple Rejection	R · R	3.5V≦V_{IN}≦12V, I_{OUT}=50mA, f=120Hz	53	64	-	dB
Dropout Voltage	V_D	I_{OUT}=0.5A	-	0.3	0.5	V
		I_{OUT}=1A	-	0.5	-	

ELECTRICAL CHARACTERISTICS

KIA78D030S/F/PI (Unless otherwise specified, V_{IN}=5V, Tj=25℃)

CHARACTERISTIC	SYMBOL	CONDITIONS	MIN.	TYP.	MAX.	UNIT
Output Voltage	V_{OUT}	V_{IN}=5.0V, I_{OUT}=0.5A	2.925	3.0	3.075	V
		4.0V≦V_{IN}≦12V, 5mA≦I_{OUT}≦1A, 0℃≦Tj≦125℃	2.895	3.0	3.105	
Line Regulation	Reg Line	4.0V≦V_{IN}≦12V, I_{OUT}=0.5A	-	5	20	mV
Load Regulation	Reg Load	V_{IN}=5.0V, 5mA≦I_{OUT}≦1A	-	5	20	mV
Quiescent Current	I_B	4.0V≦V_{IN}≦12V, I_{OUT}=0A	-	0.8	1.8	mA
		4.0V≦V_{IN}≦12V, I_{OUT}=1A	-	10	20	
Starting Quiescent Current	I_{Bstart}	V_{IN}=2.1V, I_{OUT}=0A	-	1.1	5	mA
		V_{IN}=2.8V, I_{OUT}=1A	-	13	30	
Output Noise Voltage	V_{NO}	V_{IN}=5.0V, I_{OUT}=50mA, 10Hz≦f≦100kHz	-	110	-	μVrms
Ripple Rejection	R · R	4.0V≦V_{IN}≦12V, I_{OUT}=50mA, f=120Hz	50	63	-	dB
Dropout Voltage	V_D	I_{OUT}=0.5A	-	0.3	0.5	V
		I_{OUT}=1A	-	0.5	-	

ELECTRICAL CHARACTERISTICS

KIA78D033S/F/PI (Unless otherwise specified, V_{IN}=5.3V, Tj=25℃)

CHARACTERISTIC	SYMBOL	CONDITIONS	MIN.	TYP.	MAX.	UNIT
Output Voltage	V_{OUT}	V_{IN}=5.3V, I_{OUT}=0.5A	3.218	3.3	3.382	V
		4.3V≦V_{IN}≦12V, 5mA≦I_{OUT}≦1A, 0℃≦Tj≦125℃	3.184	3.3	3.416	
Line Regulation	Reg Line	4.3V≦V_{IN}≦12V, I_{OUT}=0.5A	-	5	20	mV
Load Regulation	Reg Load	V_{IN}=5.3V, 5mA≦I_{OUT}≦1A	-	5	20	mV
Quiescent Current	I_B	4.3V≦V_{IN}≦12V, I_{OUT}=0A	-	0.8	1.8	mA
		4.3V≦V_{IN}≦12V, I_{OUT}=1A	-	10	20	
Starting Quiescent Current	I_{Bstart}	V_{IN}=2.1V, I_{OUT}=0A	-	1.1	5	mA
		V_{IN}=2.9V, I_{OUT}=1A	-	13	30	
Output Noise Voltage	V_{NO}	V_{IN}=5.3V, I_{OUT}=50mA, 10Hz≦f≦100kHz	-	115	-	μVrms
Ripple Rejection	R · R	4.3V≦V_{IN}≦12V, I_{OUT}=50mA, f=120Hz	48	61	-	dB
Dropout Voltage	V_D	I_{OUT}=0.5A	-	0.3	0.5	V
		I_{OUT}=1A	-	0.5	-	

ELECTRICAL CHARACTERISTICS

KIA78D050S/F/PI (Unless otherwise specified, V_{IN}=7V, Tj=25℃)

CHARACTERISTIC	SYMBOL	CONDITIONS	MIN.	TYP.	MAX.	UNIT
Output Voltage	V_{OUT}	V_{IN}=7V, I_{OUT}=0.5A	4.88	5.0	5.12	V
		6.0V≦V_{IN}≦12V, 5mA≦I_{OUT}≦1A, 0℃≦Tj≦125℃	4.83	5.0	5.17	
Line Regulation	Reg Line	6.0V≦V_{IN}≦12V, I_{OUT}=0.5A	-	5	20	mV
Load Regulation	Reg Load	V_{IN}=7.0V, 5mA≦I_{OUT}≦1A	-	5	20	mV
Quiescent Current	I_B	6.0V≦V_{IN}≦12V, I_{OUT}=0A	-	0.8	1.8	mA
		6.0V≦V_{IN}≦12V, I_{OUT}=1A	-	10	20	
Starting Quiescent Current	I_{Bstart}	V_{IN}=2.1V, I_{OUT}=0A	-	1.3	5	mA
		V_{IN}=3.0V, I_{OUT}=1A	-	14	30	
Output Noise Voltage	V_{NO}	V_{IN}=7.0V, I_{OUT}=50mA, 10Hz≦f≦100kHz	-	150	-	μVrms
Ripple Rejection	R · R	6.0V≦V_{IN}≦12V, I_{OUT}=50mA, f=120Hz	48	60	-	dB
Dropout Voltage	V_D	I_{OUT}=0.5A	-	0.3	0.5	V
		I_{OUT}=1A	-	0.5	-	

Fig. 1 Standard Test Circuit

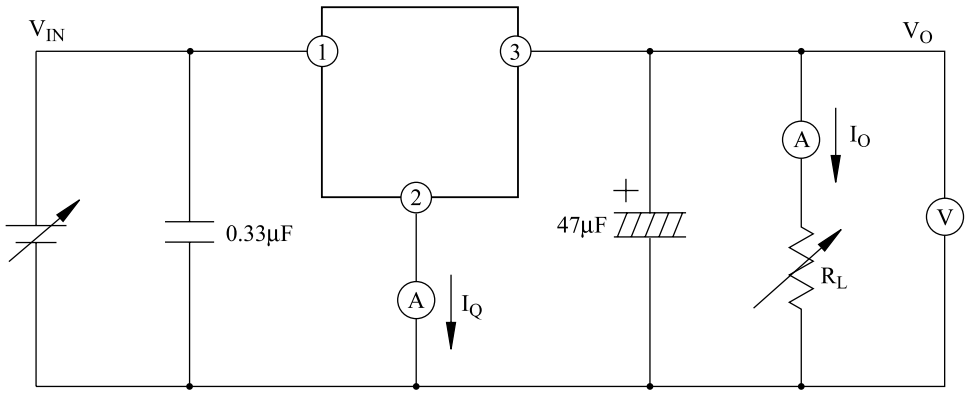

Fig. 2 Ripple Rejection Test Circuit

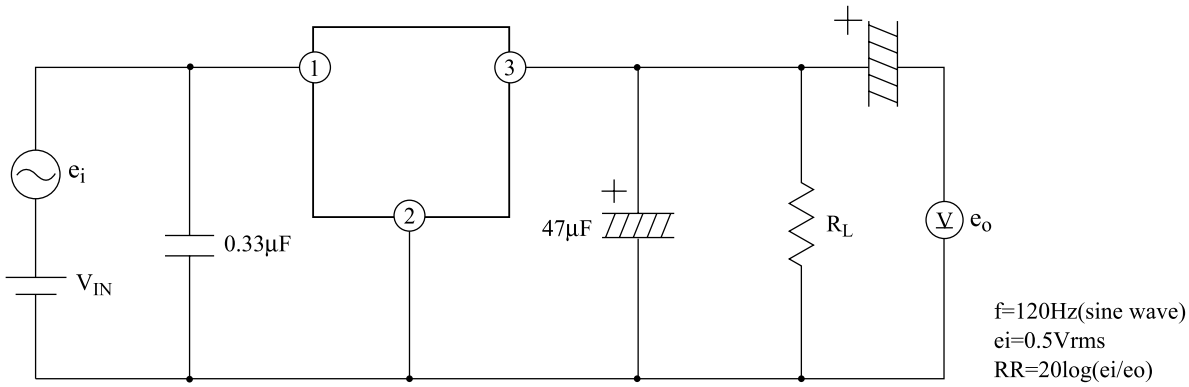

Fig. 3 Application Circuit for Standard

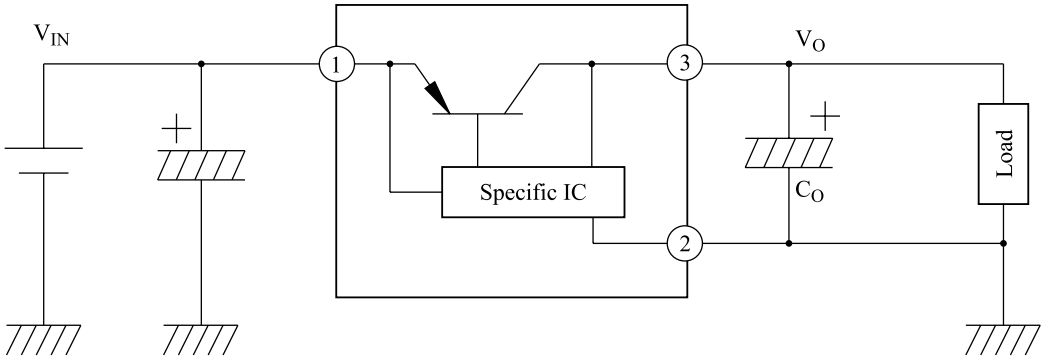

Fig. 4 V_{OUT} - T_j

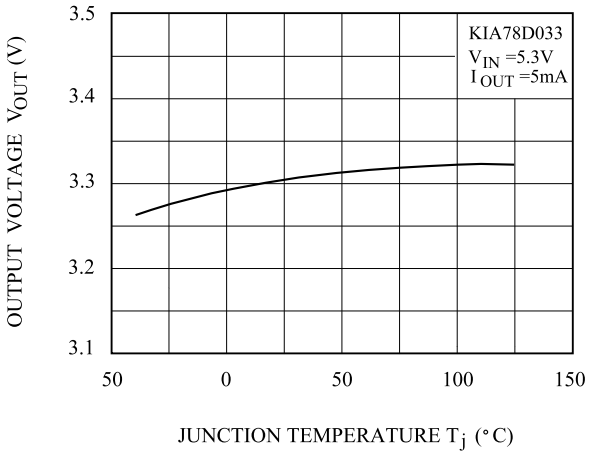

Fig. 5 V_{OUT} - V_{IN}

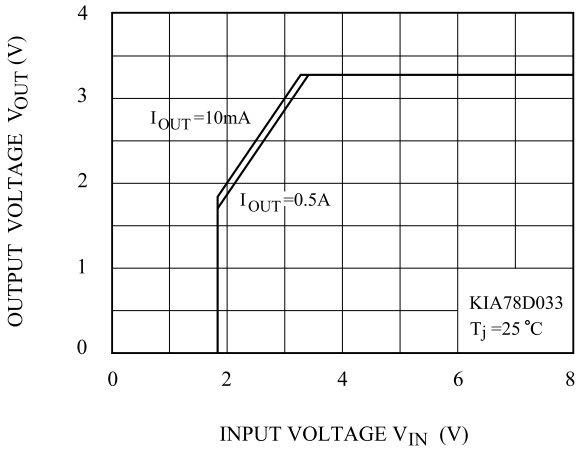

Fig. 6 I_B - V_{IN}

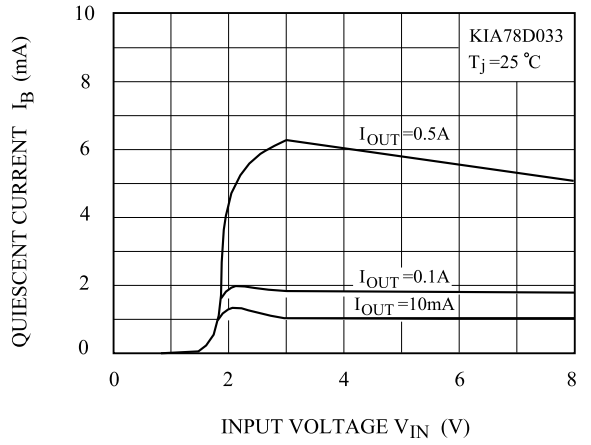

Fig. 7 I_B - T_j

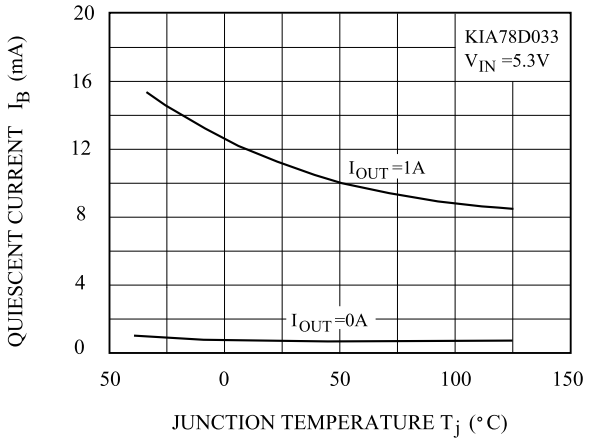

Fig. 8 I_B - I_{OUT}

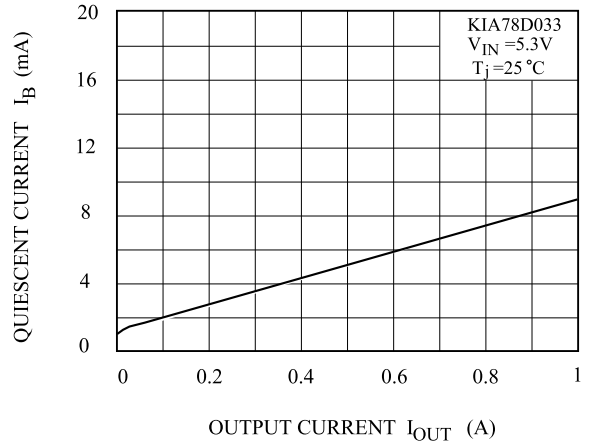

Fig. 9 V_{OUT} - I_{OUT}

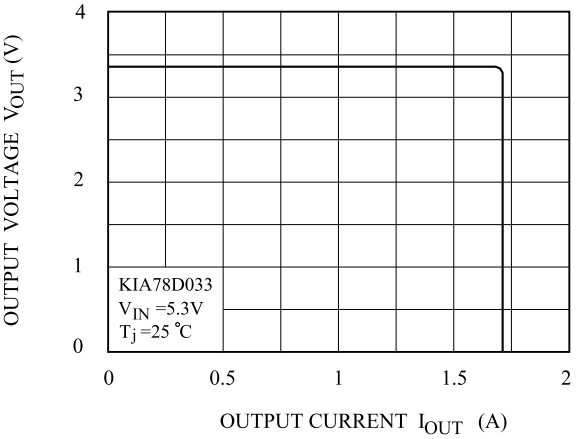

Fig.10 V_D - T_j

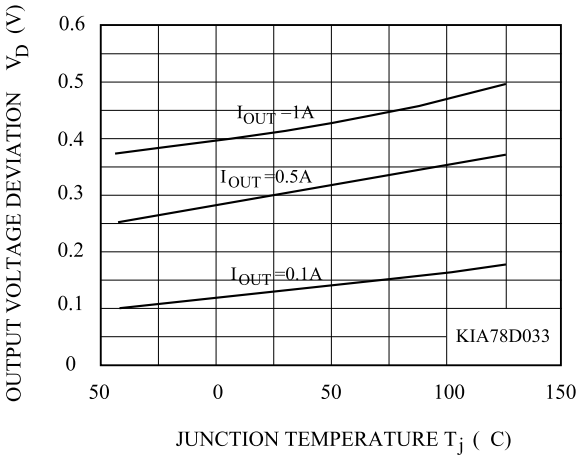

Fig.11 R·R-f

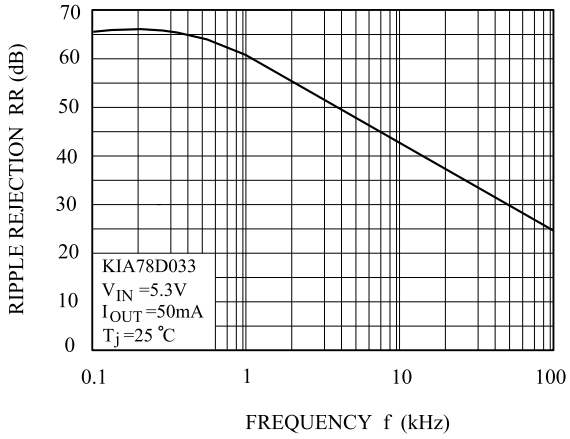

Fig.13 P_D - Ta (F-Type : DPAK)

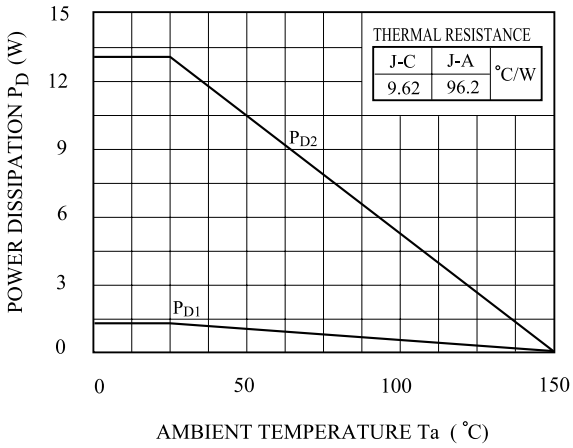
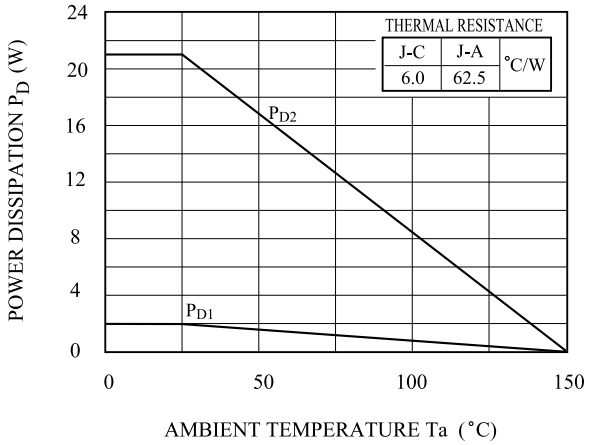
Fig.14 P_D - Ta (PI-Type : TO-220IS)