L78xx
L78xxC

Positive voltage regulators

Features

- Output current to 1.5 A
- Output voltages of 5; 5.2; 6; 8; 8.5; 9; 10; 12; 15; 18; 20; 24 V
- Thermal overload protection
- Short circuit protection
- Output transition SOA protection

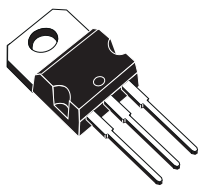

TO-220

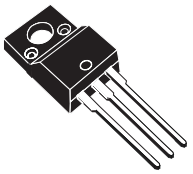

TO-220FP

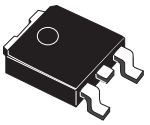

D²PAK

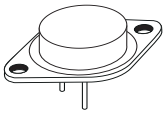

TO-3

Description

The L78xx series of three-terminal positive regulators is available in TO-220, TO-220FP, TO-3 and D^{2}PAK packages and several fixed output voltages, making it useful in a wide range of applications. These regulators can provide local on-card regulation, eliminating the distribution problems associated with single point regulation. Each type employs internal current limiting, thermal shut-down and safe area protection, making it essentially indestructible. If adequate heat sinking is provided, they can deliver over 1 A output current. Although designed primarily as fixed voltage regulators, these devices can be used with external components to obtain adjustable voltage and currents.

Table 1. Device summary

Order codes	
L7805	L7810C
L7805C	L7812C
L7852C	L7815C
L7806C	L7818C
L7808C	L7820C
L7885C	L7824C
L7809C	

Contents

1 Diagram 5

2 Pin configuration 6

3 Maximum ratings 7

4 Test circuits 9

5 Electrical characteristics 11

6 Typical performance 31

7 Package mechanical data 41

8 Order code 50

9 Revision history 51

List of figures

Figure 1. Block diagram . . . 5
Figure 2. Pin connections (top view) . . . 6
Figure 3. Schematic diagram . . . 6
Figure 4. Application circuits . . . 8
Figure 5. DC Parameter . . . 9
Figure 6. Load regulation . . . 9
Figure 7. Ripple rejection . . . 10
Figure 8. Dropout voltage vs junction temperature . . . 31
Figure 9. Peak output current vs input/output differential voltage . . . 31
Figure 10. Supply voltage rejection vs frequency . . . 31
Figure 11. Output voltage vs junction temperature . . . 31
Figure 12. Output impedance vs frequency . . . 31
Figure 13. Quiescent current vs junction temp. . . . 31
Figure 14. Load transient response . . . 32
Figure 15. Line transient response . . . 32
Figure 16. Quiescent current vs input voltage . . . 32
Figure 17. Fixed output regulator . . . 32
Figure 18. Current regulator . . . 33
Figure 19. Circuit for increasing output voltage . . . 33
Figure 20. Adjustable output regulator (7 to 30 V) . . . 33
Figure 21. 0.5 to 10 V Regulator . . . 34
Figure 22. High current voltage regulator . . . 34
Figure 23. High output current with short circuit protection . . . 34
Figure 24. Tracking voltage regulator . . . 35
Figure 25. Split power supply (± 15 V - 1 A) . . . 35
Figure 26. Negative output voltage circuit . . . 36
Figure 27. Switching regulator . . . 36
Figure 28. High input voltage circuit . . . 36
Figure 29. High input voltage circuit . . . 37
Figure 30. High output voltage regulator . . . 37
Figure 31. High input and output voltage . . . 37
Figure 32. Reducing power dissipation with dropping resistor . . . 38
Figure 33. Remote shutdown . . . 38
Figure 34. Power AM modulator (unity voltage gain, $I_O \leq 0.5$) . . . 38
Figure 35. Adjustable output voltage with temperature compensation . . . 39
Figure 36. Light controllers ($V_{Omin} = V_{XX} + V_{BE}$) . . . 39
Figure 37. Protection against input short-circuit with high capacitance loads . . . 40
Figure 38. Drawing dimension D^2PAK (type STD-ST) . . . 45
Figure 39. Drawing dimension D^2PAK (type WOOSEOK-SUBCON.) . . . 46
Figure 40. D^2PAK footprint recommended data . . . 48

List of tables

Table 1. Device summary . . . 1
Table 2. Absolute maximum ratings . . . 7
Table 3. Thermal data . . . 7
Table 4. Electrical characteristics of L7805 (refer to the test circuits, T_J = -55 to 150°C, V_I = 10 V, I_O = 500 mA, C_I = 0.33 µF, C_O = 0.1 µF unless otherwise specified) . . . 11
Table 5. Electrical characteristics of L7806 (refer to the test circuits, T_J = -55 to 150°C, V_I = 11 V,I_O = 500 mA, C_I = 0.33 µF, C_O = 0.1 µF unless otherwise specified) . . . 12
Table 6. Electrical characteristics of L7808 (refer to the test circuits, T_J = -55 to 150°C, V_I = 14V, I_O = 500 mA, C_I = 0.33 µF, C_O = 0.1 µF unless otherwise specified) . . . 13
Table 7. Electrical characteristics of L7812 (refer to the test circuits, T_J = -55 to 150°C, V_I = 19 V, I_O = 500 mA, C_I = 0.33 µF, C_O = 0.1 µF unless otherwise specified) . . . 14
Table 8. Electrical characteristics of L7815 (refer to the test circuits, T_J = -55 to 150°C, V_I = 23 V, I_O = 500 mA, C_I = 0.33 µF, C_O = 0.1 µF unless otherwise specified) . . . 15
Table 9. Electrical characteristics of L7818 (refer to the test circuits, T_J = -55 to 150°C, V_I = 26 V, I_O = 500 mA, C_I = 0.33 µF, C_O = 0.1 µF unless otherwise specified) . . . 16
Table 10. Electrical characteristics of L7820 (refer to the test circuits, T_J = -55 to 150°C, V_I = 28 V, I_O = 500 mA, C_I = 0.33 µF, C_O = 0.1 µF unless otherwise specified) . . . 17
Table 11. Electrical characteristics of L7824 (refer to the test circuits, T_J = -55 to 150°C, V_I = 33 V, I_O = 500 mA, C_I = 0.33 µF, C_O = 0.1 µF unless otherwise specified) . . . 18
Table 12. Electrical characteristics of L7805C (refer to the test circuits, T_J = 0 to 150°C, V_I = 10 V, I_O = 500 mA, C_I = 0.33 µF, C_O = 0.1 µF unless otherwise specified) . . . 19
Table 13. Electrical characteristics of L7852C (refer to the test circuits, T_J = 0 to 150°C, V_I = 10 V, I_O = 500 mA, C_I = 0.33 µF, C_O = 0.1 µF unless otherwise specified) . . . 20
Table 14. Electrical characteristics of L7806C (refer to the test circuits, T_J = 0 to 150°C, V_I = 11 V, I_O = 500 mA, C_I = 0.33 µF, C_O = 0.1 µF unless otherwise specified) . . . 21
Table 15. Electrical characteristics of L7808C (refer to the test circuits, T_J = 0 to 150°C, V_I = 14 V, I_O = 500 mA, C_I = 0.33 µF, C_O = 0.1 µF unless otherwise specified) . . . 22
Table 16. Electrical characteristics of L7885C (refer to the test circuits, T_J = 0 to 150°C, V_I = 14.5 V, I_O = 500 mA, C_I = 0.33 µF, C_O = 0.1 µF unless otherwise specified) . . . 23
Table 17. Electrical characteristics of L7809C (refer to the test circuits, T_J = 0 to 150°C, V_I = 15 V, I_O = 500 mA, C_I = 0.33 µF, C_O = 0.1 µF unless otherwise specified) . . . 24
Table 18. Electrical characteristics of L7810C (refer to the test circuits, T_J = 0 to 150°C, V_I = 15 V, I_O = 500 mA, C_I = 0.33 µF, C_O = 0.1 µF unless otherwise specified) . . . 25
Table 19. Electrical characteristics of L7812C (refer to the test circuits, T_J = 0 to 150°C, V_I = 19 V, I_O = 500 mA, C_I = 0.33 µF, C_O = 0.1 µF unless otherwise specified) . . . 26
Table 20. Electrical characteristics of L7815C (refer to the test circuits, T_J = 0 to 150°C, V_I = 23 V, I_O = 500 mA, C_I = 0.33 µF, C_O = 0.1 µF unless otherwise specified) . . . 27
Table 21. Electrical characteristics of L7818C (refer to the test circuits, T_J = 0 to 150°C, V_I = 26 V, I_O = 500 mA, C_I = 0.33 µF, C_O = 0.1 µF unless otherwise specified) . . . 28
Table 22. Electrical characteristics of L7820C (refer to the test circuits, T_J = 0 to 150°C, V_I = 28 V, I_O = 500 mA, C_I = 0.33 µF, C_O = 0.1 µF unless otherwise specified) . . . 29
Table 23. Electrical characteristics of L7824C (refer to the test circuits, T_J = 0 to 150°C, V_I = 33 V, I_O = 500 mA, C_I = 0.33 µF, C_O = 0.1 µF unless otherwise specified) . . . 30
Table 24. D^2PAK mechanical data . . . 47
Table 25. Footprint data . . . 48
Table 26. Order code . . . 50
Table 27. Revision history . . . 51

1 Diagram

Figure 1. Block diagram

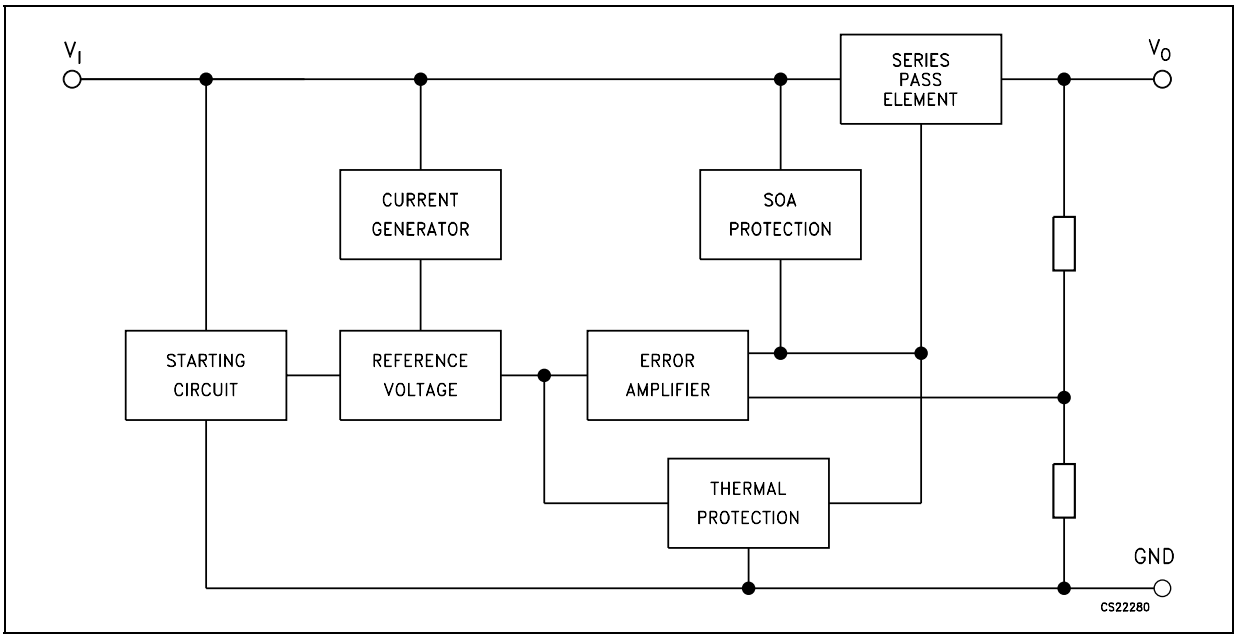

2 Pin configuration

Figure 2. Pin connections (top view)

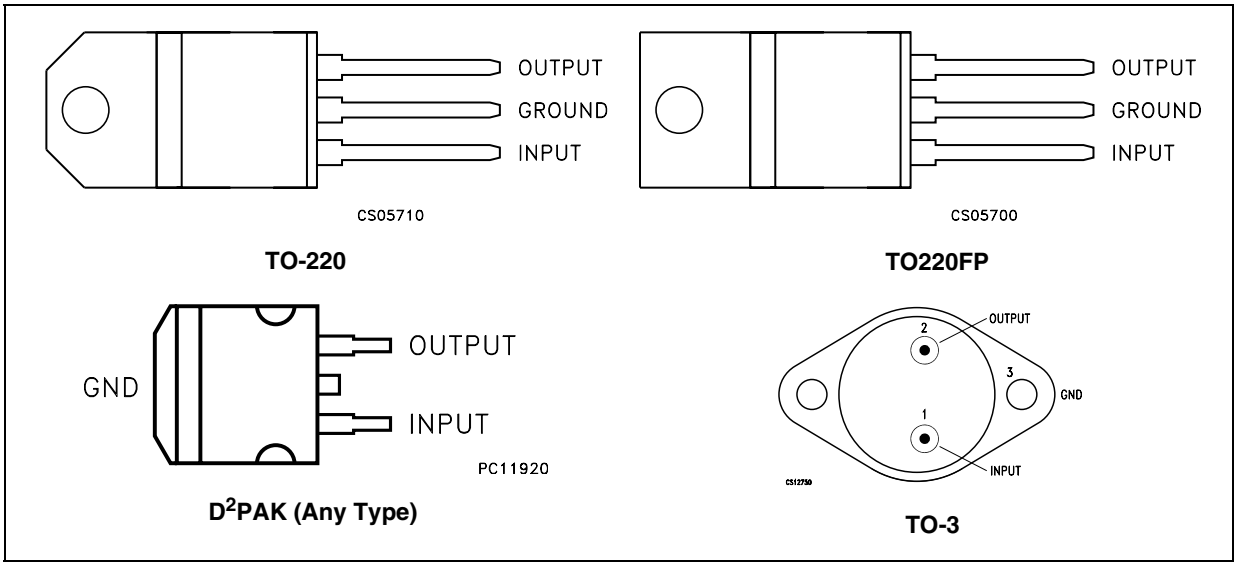

Figure 3. Schematic diagram

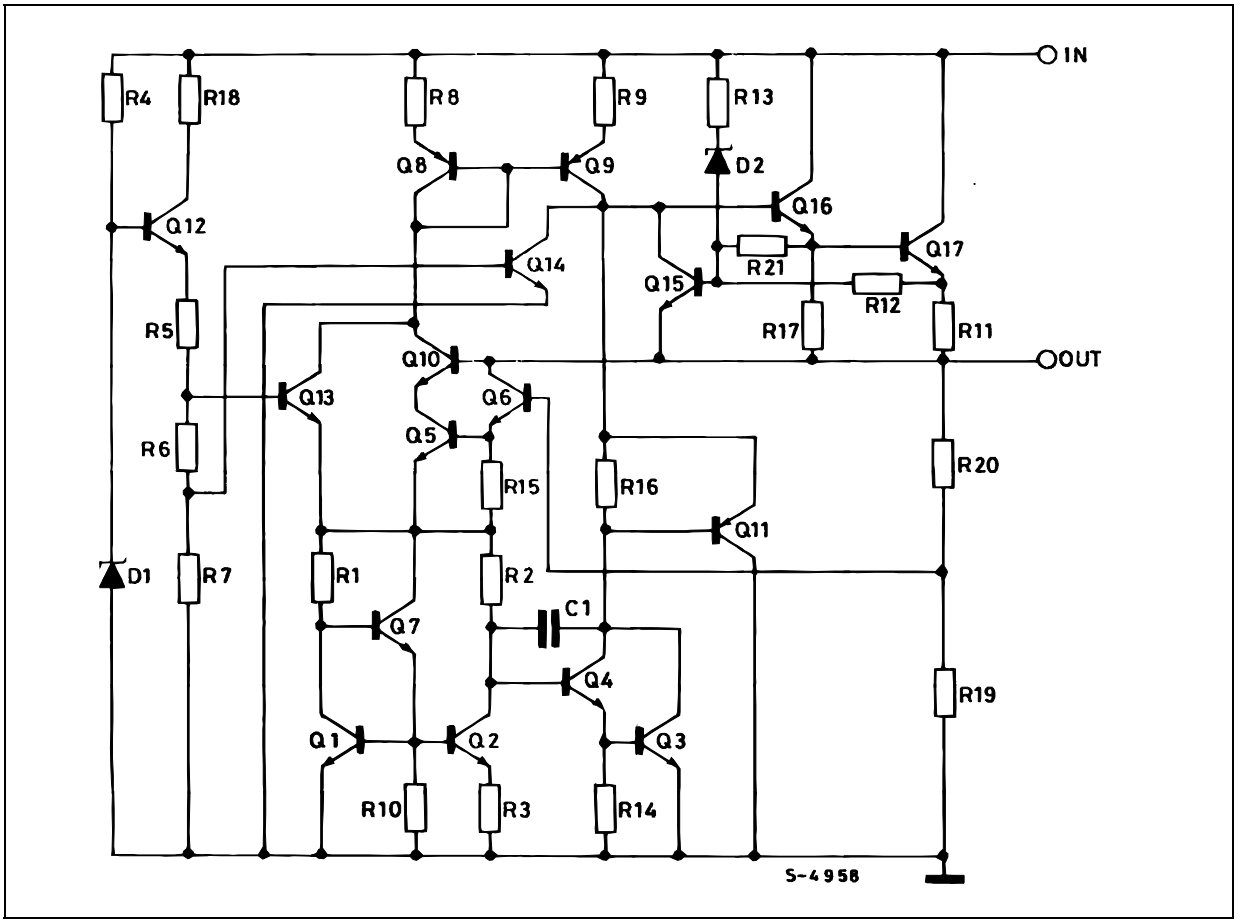

3 Maximum ratings

Table 2. Absolute maximum ratings

Symbol	Parameter		Value	Unit
V_I	DC Input voltage	for V_O= 5 to 18 V	35	V
		for V_O= 20, 24 V	40	
I_O	Output current		Internally Limited	
P_D	Power dissipation		Internally Limited	
T_{STG}	Storage temperature range		-65 to 150	°C
T_{OP}	Operating junction temperature range	for L7800	-55 to 150	°C
		for L7800C	0 to 150	

Note: Absolute Maximum Ratings are those values beyond which damage to the device may occur. Functional operation under these condition is not implied

Table 3. Thermal data

Symbol	Parameter	D^2PAK	TO-220	TO-220FP	TO-3	Unit
R_{thJC}	Thermal resistance junction-case	3	5	5	4	°C/W
R_{thJA}	Thermal resistance junction-ambient	62.5	50	60	35	°C/W

Figure 4. Application circuits

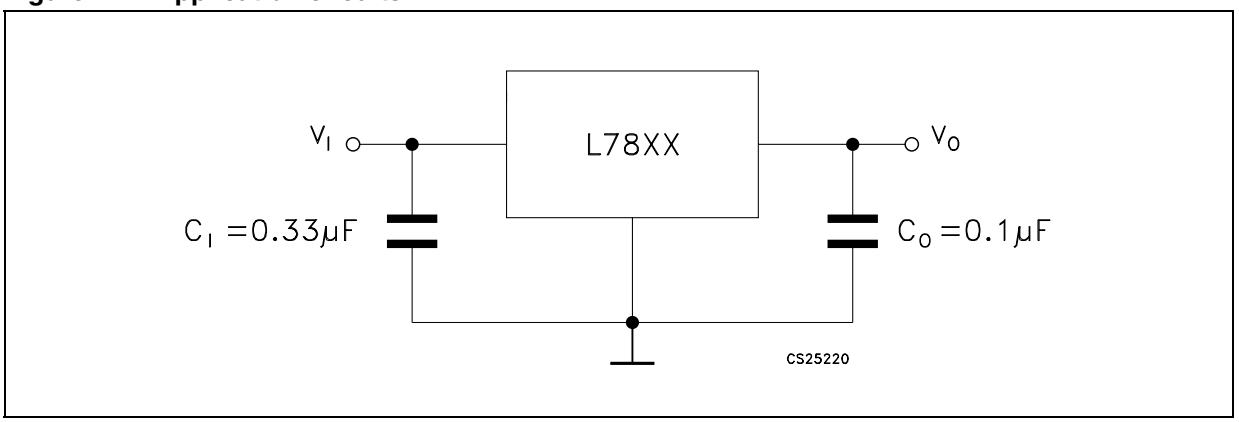

4 Test circuits

Figure 5. DC Parameter

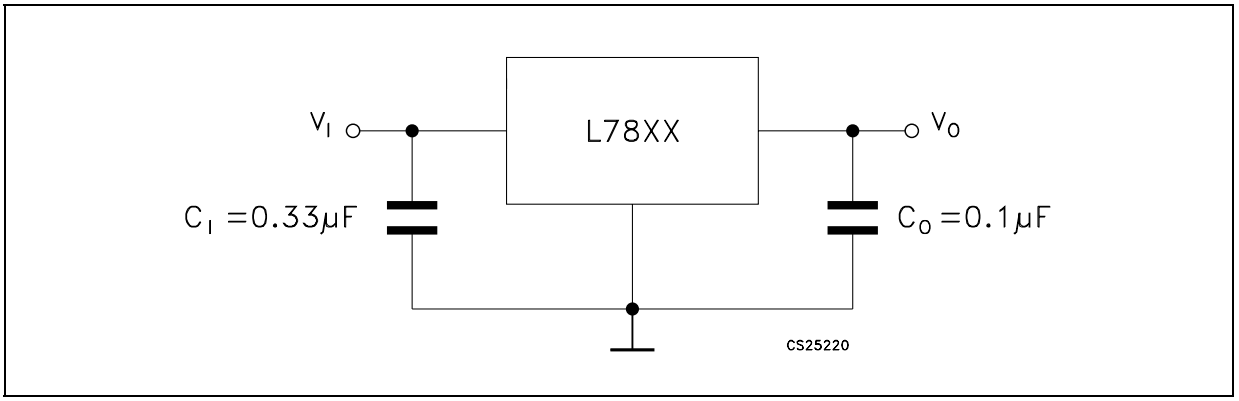

Figure 6. Load regulation

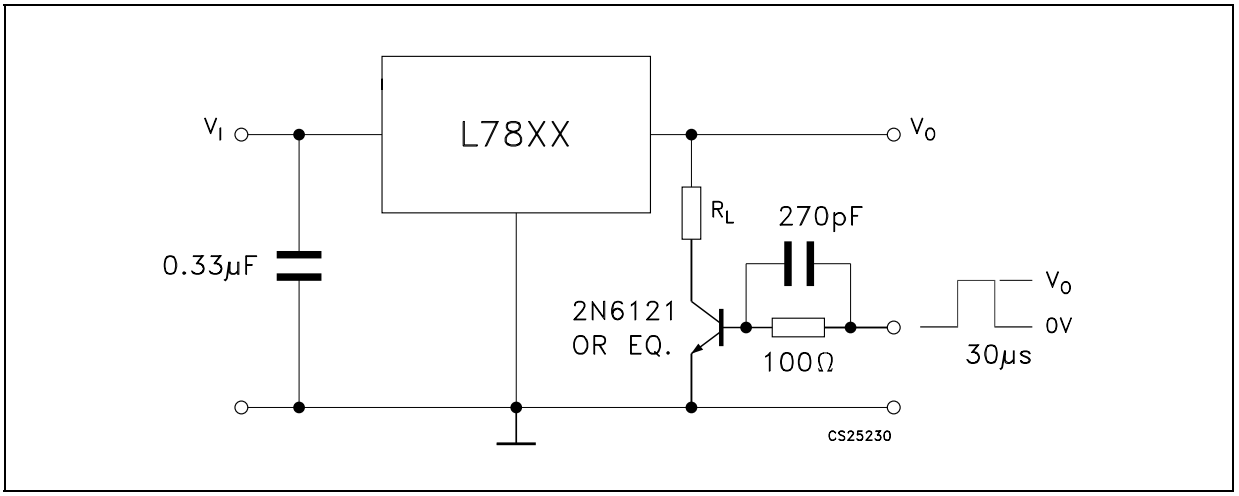

Figure 7. Ripple rejection

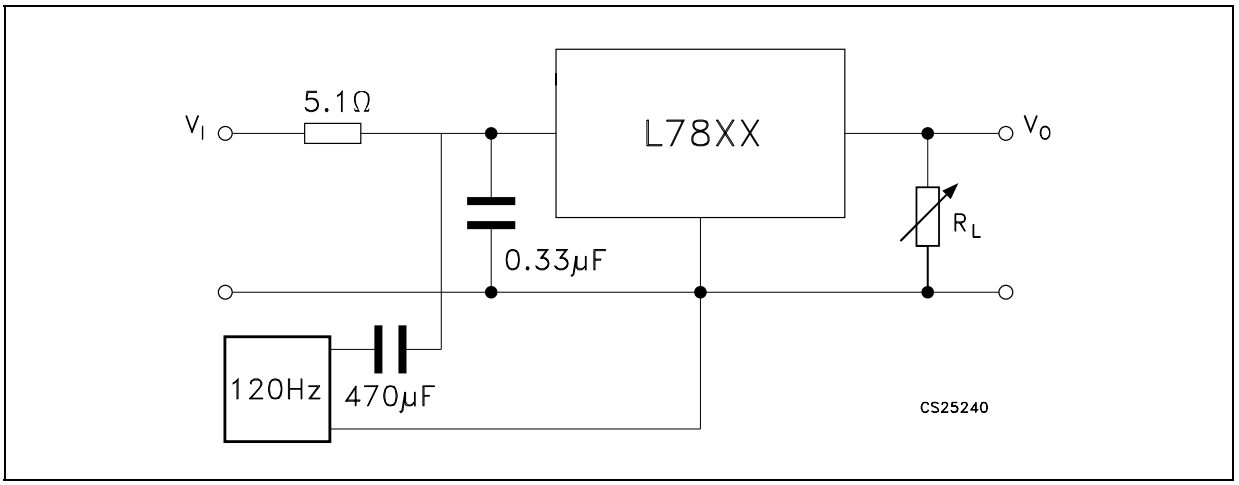

5 Electrical characteristics

Table 4. Electrical characteristics of L7805 (refer to the test circuits, T_J = -55 to 150°C, V_I = 10 V, I_O = 500 mA, C_I = 0.33 µF, C_O = 0.1 µF unless otherwise specified)

Symbol	Parameter	Test conditions	Min.	Typ.	Max.	Unit
V_O	Output voltage	T_J = 25°C	4.8	5	5.2	V
V_O	Output voltage	I_O = 5 mA to 1 A, P_O ≤15 W V_I = 8 to 20 V	4.65	5	5.35	V
ΔV_O(1)	Line regulation	V_I = 7 to 25 V, T_J = 25°C		3	50	mV
		V_I = 8 to 12 V, T_J = 25°C		1	25	
ΔV_O(1)	Load regulation	I_O = 5 mA to 1.5 A, T_J = 25°C			100	mV
		I_O = 250 to 750 mA, T_J = 25°C			25	
I_d	Quiescent current	T_J = 25°C			6	mA
ΔI_d	Quiescent current change	I_O = 5 mA to 1 A			0.5	mA
		V_I = 8 to 25 V			0.8	
$\Delta V_O/\Delta T$	Output voltage drift	I_O = 5 mA		0.6		mV/°C
eN	Output noise voltage	B =10 Hz to 100 KHz, T_J = 25°C			40	µV/V_O
SVR	Supply voltage rejection	V_I = 8 to 18 V, f = 120 Hz	68			dB
V_d	Dropout voltage	I_O = 1 A, T_J = 25°C		2	2.5	V
R_O	Output resistance	f = 1 KHz		17		mΩ
I_{sc}	Short circuit current	V_I = 35 V, T_J = 25°C		0.75	1.2	A
I_{scp}	Short circuit peak current	T_J = 25°C	1.3	2.2	3.3	A

1. Load and line regulation are specified at constant junction temperature. Changes in V_O due to heating effects must be taken into account separately. Pulse testing with low duty cycle is used.

Table 5. Electrical characteristics of L7806 (refer to the test circuits, T_J = -55 to 150°C, V_I = 11 V, I_O = 500 mA, C_I = 0.33 µF, C_O = 0.1 µF unless otherwise specified)

Symbol	Parameter	Test conditions	Min.	Typ.	Max.	Unit
V_O	Output voltage	T_J = 25°C	5.75	6	6.25	V
V_O	Output voltage	I_O = 5 mA to 1 A, $P_O \leq$15 W V_I = 9 to 21 V	5.65	6	6.35	V
ΔV_O(1)	Line regulation	V_I = 8 to 25 V, T_J = 25°C			60	mV
		V_I = 9 to 13 V, T_J = 25°C			30	
ΔV_O(1)	Load regulation	I_O = 5 mA to 1.5 A, T_J = 25°C			100	mV
		I_O = 250 to 750 mA, T_J = 25°C			30	
I_d	Quiescent current	T_J = 25°C			6	mA
ΔI_d	Quiescent current change	I_O = 5 mA to 1 A			0.5	mA
		V_I = 9 to 25 V			0.8	
$\Delta V_O/\Delta T$	Output voltage drift	I_O = 5 mA		0.7		mV/°C
eN	Output noise voltage	B =10 Hz to 100 KHz, T_J = 25°C			40	µV/V_O
SVR	Supply voltage rejection	V_I = 9 to 19 V, f = 120 Hz	65			dB
V_d	Dropout voltage	I_O = 1 A, T_J = 25°C		2	2.5	V
R_O	Output resistance	f = 1 KHz		19		mΩ
I_{sc}	Short circuit current	V_I = 35 V, T_J = 25°C		0.75	1.2	A
I_{scp}	Short circuit peak current	T_J = 25°C	1.3	2.2	3.3	A

1. Load and line regulation are specified at constant junction temperature. Changes in V_O due to heating effects must be taken into account separately. Pulse testing with low duty cycle is used.

Table 6. Electrical characteristics of L7808 (refer to the test circuits, T_J = -55 to 150°C, V_I = 14V, I_O = 500 mA, C_I = 0.33 µF, C_O = 0.1 µF unless otherwise specified)

Symbol	Parameter	Test conditions	Min.	Typ.	Max.	Unit
V_O	Output voltage	T_J = 25°C	7.7	8	8.3	V
V_O	Output voltage	I_O = 5 mA to 1A, $P_O \leq$15 W V_I = 11.5 to 23 V	7.6	8	8.4	V
ΔV_O(1)	Line regulation	V_I = 10.5 to 25 V, T_J = 25°C			80	mV
		V_I = 11 to 17 V, T_J = 25°C			40	
ΔV_O(1)	Load regulation	I_O = 5 mA to 1.5 A, T_J = 25°C			100	mV
		I_O = 250 to 750 mA, T_J = 25°C			40	
I_d	Quiescent current	T_J = 25°C			6	mA
ΔI_d	Quiescent current change	I_O = 5 mA to 1 A			0.5	mA
		V_I = 11.5 to 25 V			0.8	
$\Delta V_O/\Delta T$	Output voltage drift	I_O = 5 mA		1		mV/°C
eN	Output noise voltage	B =10 Hz to 100 KHz, T_J = 25°C			40	µV/V_O
SVR	Supply voltage rejection	V_I = 11.5 to 21.5 V, f = 120 Hz	62			dB
V_d	Dropout voltage	I_O = 1 A, T_J = 25°C		2	2.5	V
R_O	Output resistance	f = 1 KHz		16		mΩ
I_{sc}	Short circuit current	V_I = 35 V, T_J = 25°C		0.75	1.2	A
I_{scp}	Short circuit peak current	T_J = 25°C	1.3	2.2	3.3	A

1. Load and line regulation are specified at constant junction temperature. Changes in V_O due to heating effects must be taken into account separately. Pulse testing with low duty cycle is used.

Table 7. Electrical characteristics of L7812 (refer to the test circuits, T_J = -55 to 150°C, V_I = 19 V, I_O = 500 mA, C_I = 0.33 µF, C_O = 0.1 µF unless otherwise specified)

Symbol	Parameter	Test conditions	Min.	Typ.	Max.	Unit
V_O	Output voltage	T_J = 25°C	11.5	12	12.5	V
V_O	Output voltage	I_O = 5 mA to 1 A, P_O ≤15 W V_I = 15.5 to 27 V	11.4	12	12.6	V
ΔV_O(1)	Line regulation	V_I = 14.5 to 30 V, T_J = 25°C			120	mV
		V_I = 16 to 22 V, T_J = 25°C			60	
ΔV_O(1)	Load regulation	I_O = 5 mA to 1.5 A, T_J = 25°C			100	mV
		I_O = 250 to 750 mA, T_J = 25°C			60	
I_d	Quiescent current	T_J = 25°C			6	mA
ΔI_d	Quiescent current change	I_O = 5 mA to 1 A			0.5	mA
		V_I = 15 to 30 V			0.8	
$\Delta V_O/\Delta T$	Output voltage drift	I_O = 5 mA		1.5		mV/°C
eN	Output noise voltage	B =10 Hz to 100 KHz, T_J = 25°C			40	µV/V_O
SVR	Supply voltage rejection	V_I = 15 to 25 V, f = 120 Hz	61			dB
V_d	Dropout voltage	I_O = 1 A, T_J = 25°C		2	2.5	V
R_O	Output resistance	f = 1 KHz		18		mΩ
I_{sc}	Short circuit current	V_I = 35 V, T_J = 25°C		0.75	1.2	A
I_{scp}	Short circuit peak current	T_J = 25°C	1.3	2.2	3.3	A

1. Load and line regulation are specified at constant junction temperature. Changes in V_O due to heating effects must be taken into account separately. Pulse testing with low duty cycle is used.

Table 8. Electrical characteristics of L7815 (refer to the test circuits, T_J = -55 to 150°C, V_I = 23 V, I_O = 500 mA, C_I = 0.33 µF, C_O = 0.1 µF unless otherwise specified)

Symbol	Parameter	Test conditions	Min.	Typ.	Max.	Unit
V_O	Output voltage	T_J = 25°C	14.4	15	15.6	V
V_O	Output voltage	I_O = 5 mA to 1 A, $P_O \leq$15 W V_I = 18.5 to 30 V	14.25	15	15.75	V
ΔV_O(1)	Line regulation	V_I = 17.5 to 30 V, T_J = 25°C			150	mV
		V_I = 20 to 26 V, T_J = 25°C			75	
ΔV_O(1)	Load regulation	I_O = 5 mA to 1.5 A, T_J = 25°C			150	mV
		I_O = 250 to 750 mA, T_J = 25°C			75	
I_d	Quiescent current	T_J = 25°C			6	mA
ΔI_d	Quiescent current change	I_O = 5 mA to 1 A			0.5	mA
		V_I = 18.5 to 30 V			0.8	
$\Delta V_O/\Delta T$	Output voltage drift	I_O = 5 mA		1.8		mV/°C
eN	Output noise voltage	B =10 Hz to 100 KHz, T_J = 25°C			40	µV/V_O
SVR	Supply voltage rejection	V_I = 18.5 to 28.5 V, f = 120 Hz	60			dB
V_d	Dropout voltage	I_O = 1 A, T_J = 25°C		2	2.5	V
R_O	Output resistance	f = 1 KHz		19		mΩ
I_{sc}	Short circuit current	V_I = 35 V, T_J = 25°C		0.75	1.2	A
I_{scp}	Short circuit peak current	T_J = 25°C	1.3	2.2	3.3	A

1. Load and line regulation are specified at constant junction temperature. Changes in V_O due to heating effects must be taken into account separately. Pulse testing with low duty cycle is used.

Table 9. Electrical characteristics of L7818 (refer to the test circuits, T_J = -55 to 150°C, V_I = 26 V, I_O = 500 mA, C_I = 0.33 µF, C_O = 0.1 µF unless otherwise specified)

Symbol	Parameter	Test conditions	Min.	Typ.	Max.	Unit
V_O	Output voltage	T_J = 25°C	17.3	18	18.7	V
V_O	Output voltage	I_O = 5 mA to 1 A, $P_O \leq$15 W V_I = 22 to 33 V	17.1	18	18.9	V
ΔV_O(1)	Line regulation	V_I = 21 to 33 V, T_J = 25°C			180	mV
		V_I = 24 to 30 V, T_J = 25°C			90	
ΔV_O(1)	Load regulation	I_O = 5 mA to 1.5 A, T_J = 25°C			180	mV
		I_O = 250 to 750 mA, T_J = 25°C			90	
I_d	Quiescent current	T_J = 25°C			6	mA
ΔI_d	Quiescent current change	I_O = 5 mA to 1 A			0.5	mA
		V_I = 22 to 33 V			0.8	
$\Delta V_O/\Delta T$	Output voltage drift	I_O = 5 mA		2.3		mV/°C
eN	Output noise voltage	B =10 Hz to 100 KHz, T_J = 25°C			40	µV/V_O
SVR	Supply voltage rejection	V_I = 22 to 32 V, f = 120 Hz	59			dB
V_d	Dropout voltage	I_O = 1 A, T_J = 25°C		2	2.5	V
R_O	Output resistance	f = 1 KHz		22		mΩ
I_{sc}	Short circuit current	V_I = 35 V, T_J = 25°C		0.75	1.2	A
I_{scp}	Short circuit peak current	T_J = 25°C	1.3	2.2	3.3	A

1. Load and line regulation are specified at constant junction temperature. Changes in V_O due to heating effects must be taken into account separately. Pulse testing with low duty cycle is used.

Table 10. Electrical characteristics of L7820 (refer to the test circuits, T_J = -55 to 150°C, V_I = 28 V, I_O = 500 mA, C_I = 0.33 µF, C_O = 0.1 µF unless otherwise specified)

Symbol	Parameter	Test conditions	Min.	Typ.	Max.	Unit
V_O	Output voltage	T_J = 25°C	19.2	20	20.8	V
V_O	Output voltage	I_O = 5 mA to 1 A, P_O ≤15 W V_I = 24 to 35 V	19	20	21	V
ΔV_O(1)	Line regulation	V_I = 22.5 to 35 V, T_J = 25°C			200	mV
		V_I = 26 to 32 V, T_J = 25°C			100	
ΔV_O(1)	Load regulation	I_O = 5 mA to 1.5 A, T_J = 25°C			200	mV
		I_O = 250 to 750 mA, T_J = 25°C			100	
I_d	Quiescent current	T_J = 25°C			6	mA
ΔI_d	Quiescent current change	I_O = 5 mA to 1 A			0.5	mA
		V_I = 24 to 35 V			0.8	
$\Delta V_O/\Delta T$	Output voltage drift	I_O = 5 mA		2.5		mV/°C
eN	Output noise voltage	B =10 Hz to 100 KHz, T_J = 25°C			40	µV/V_O
SVR	Supply voltage rejection	V_I = 24 to 35 V, f = 120 Hz	58			dB
V_d	Dropout voltage	I_O = 1 A, T_J = 25°C		2	2.5	V
R_O	Output resistance	f = 1 KHz		24		mΩ
I_{sc}	Short circuit current	V_I = 35 V, T_J = 25°C		0.75	1.2	A
I_{scp}	Short circuit peak current	T_J = 25°C	1.3	2.2	3.3	A

1. Load and line regulation are specified at constant junction temperature. Changes in V_O due to heating effects must be taken into account separately. Pulse testing with low duty cycle is used.

Table 11. Electrical characteristics of L7824 (refer to the test circuits, T_J = -55 to 150°C, V_I = 33 V, I_O = 500 mA, C_I = 0.33 µF, C_O = 0.1 µF unless otherwise specified)

Symbol	Parameter	Test conditions	Min.	Typ.	Max.	Unit
V_O	Output voltage	T_J = 25°C	23	24	25	V
V_O	Output voltage	I_O = 5 mA to 1 A, P_O ≤15 W V_I = 28 to 38 V	22.8	24	25.2	V
ΔV_O(1)	Line regulation	V_I = 27 to 38 V, T_J = 25°C			240	mV
		V_I = 30 to 36 V, T_J = 25°C			120	
ΔV_O(1)	Load regulation	I_O = 5 mA to 1.5 A, T_J = 25°C			240	mV
		I_O = 250 to 750 mA, T_J = 25°C			120	
I_d	Quiescent current	T_J = 25°C			6	mA
ΔI_d	Quiescent current change	I_O = 5 mA to 1 A			0.5	mA
		V_I = 28 to 38 V			0.8	
$\Delta V_O/\Delta T$	Output voltage drift	I_O = 5 mA		3		mV/°C
eN	Output noise voltage	B =10 Hz to 100 KHz, T_J = 25°C			40	µV/V_O
SVR	Supply voltage rejection	V_I = 28 to 38 V, f = 120 Hz	56			dB
V_d	Dropout voltage	I_O = 1 A, T_J = 25°C		2	2.5	V
R_O	Output resistance	f = 1 KHz		28		mΩ
I_{sc}	Short circuit current	V_I = 35 V, T_J = 25°C		0.75	1.2	A
I_{scp}	Short circuit peak current	T_J = 25°C	1.3	2.2	3.3	A

1. Load and line regulation are specified at constant junction temperature. Changes in V_O due to heating effects must be taken into account separately. Pulse testing with low duty cycle is used.

Table 12. Electrical characteristics of L7805C (refer to the test circuits, T_J = 0 to 150°C, V_I = 10 V, I_O = 500 mA, C_I = 0.33 µF, C_O = 0.1 µF unless otherwise specified)

Symbol	Parameter	Test conditions	Min.	Typ.	Max.	Unit
V_O	Output voltage	T_J = 25°C	4.8	5	5.2	V
V_O	Output voltage	I_O = 5 mA to 1 A, P_O ≤15 W V_I = 7 to 20 V	4.75	5	5.25	V
ΔV_O(1)	Line regulation	V_I = 7 to 25 V, T_J = 25°C		3	100	mV
		V_I = 8 to 12 V, T_J = 25°C		1	50	
ΔV_O(1)	Load regulation	I_O = 5 mA to 1.5 A, T_J = 25°C			100	mV
		I_O = 250 to 750 mA, T_J = 25°C			50	
I_d	Quiescent current	T_J = 25°C			8	mA
ΔI_d	Quiescent current change	I_O = 5 mA to 1 A			0.5	mA
		V_I = 7 to 25 V			0.8	
$\Delta V_O/\Delta T$	Output voltage drift	I_O = 5 mA		-1.1		mV/°C
eN	Output noise voltage	B =10 Hz to 100 KHz, T_J = 25°C		40		µV/V_O
SVR	Supply voltage rejection	V_I = 8 to 18 V, f = 120 Hz	62			dB
V_d	Dropout voltage	I_O = 1 A, T_J = 25°C		2		V
R_O	Output resistance	f = 1 KHz		17		mΩ
I_{sc}	Short circuit current	V_I = 35 V, T_J = 25°C		0.75		A
I_{scp}	Short circuit peak current	T_J = 25°C		2.2		A

1. Load and line regulation are specified at constant junction temperature. Changes in V_O due to heating effects must be taken into account separately. Pulse testing with low duty cycle is used.

Table 13. Electrical characteristics of L7852C (refer to the test circuits, T_J = 0 to 150°C, V_I = 10 V, I_O = 500 mA, C_I = 0.33 µF, C_O = 0.1 µF unless otherwise specified)

Symbol	Parameter	Test conditions	Min.	Typ.	Max.	Unit
V_O	Output voltage	T_J = 25°C	5.0	5.2	5.4	V
V_O	Output voltage	I_O = 5 mA to 1 A, P_O ≤15 W V_I = 8 to 20 V	4.95	5.2	5.45	V
ΔV_O(1)	Line regulation	V_I = 7 to 25 V, T_J = 25°C		3	105	mV
		V_I = 8 to 12 V, T_J = 25°C		1	52	
ΔV_O(1)	Load regulation	I_O = 5 mA to 1.5 A, T_J = 25°C			105	mV
		I_O = 250 to 750 mA, T_J = 25°C			52	
I_d	Quiescent current	T_J = 25°C			8	mA
ΔI_d	Quiescent current change	I_O = 5 mA to 1 A			0.5	mA
		V_I = 7 to 25 V			1.3	
$\Delta V_O/\Delta T$	Output voltage drift	I_O = 5 mA		-1		mV/°C
eN	Output noise voltage	B =10 Hz to 100 KHz, T_J = 25°C		42		µV/V_O
SVR	Supply voltage rejection	V_I = 8 to 18 V, f = 120 Hz	61			dB
V_d	Dropout voltage	I_O = 1 A, T_J = 25°C		2		V
R_O	Output resistance	f = 1 KHz		17		mΩ
I_{sc}	Short circuit current	V_I = 35 V, T_J = 25°C		0.75		A
I_{scp}	Short circuit peak current	T_J = 25°C		2.2		A

1. Load and line regulation are specified at constant junction temperature. Changes in V_O due to heating effects must be taken into account separately. Pulse testing with low duty cycle is used.

Table 14. Electrical characteristics of L7806C (refer to the test circuits, T_J = 0 to 150°C, V_I = 11 V, I_O = 500 mA, C_I = 0.33 µF, C_O = 0.1 µF unless otherwise specified)

Symbol	Parameter	Test conditions	Min.	Typ.	Max.	Unit
V_O	Output voltage	T_J = 25°C	5.75	6	6.25	V
V_O	Output voltage	I_O = 5 mA to 1 A, $P_O \leq$15 W V_I = 8 to 21 V	5.7	6	6.3	V
ΔV_O(1)	Line regulation	V_I = 8 to 25 V, T_J = 25°C			120	mV
		V_I = 9 to 13 V, T_J = 25°C			60	
ΔV_O(1)	Load regulation	I_O = 5 mA to 1.5 A, T_J = 25°C			120	mV
		I_O = 250 to 750 mA, T_J = 25°C			60	
I_d	Quiescent current	T_J = 25°C			8	mA
ΔI_d	Quiescent current change	I_O = 5 mA to 1 A			0.5	mA
		V_I = 8 to 25 V			1.3	
$\Delta V_O/\Delta T$	Output voltage drift	I_O = 5 mA		-0.8		mV/°C
eN	Output noise voltage	B =10 Hz to 100 KHz, T_J = 25°C		45		µV/V_O
SVR	Supply voltage rejection	V_I = 9 to 19 V, f = 120 Hz	59			dB
V_d	Dropout voltage	I_O = 1 A, T_J = 25°C		2		V
R_O	Output resistance	f = 1 KHz		19		mΩ
I_{sc}	Short circuit current	V_I = 35 V, T_J = 25°C		0.55		A
I_{scp}	Short circuit peak current	T_J = 25°C		2.2		A

1. Load and line regulation are specified at constant junction temperature. Changes in V_O due to heating effects must be taken into account separately. Pulse testing with low duty cycle is used.

Table 15. Electrical characteristics of L7808C (refer to the test circuits, T_J = 0 to 150°C, V_I = 14 V, I_O = 500 mA, C_I = 0.33 µF, C_O = 0.1 µF unless otherwise specified)

Symbol	Parameter	Test conditions	Min.	Typ.	Max.	Unit
V_O	Output voltage	T_J = 25°C	7.7	8	8.3	V
V_O	Output voltage	I_O = 5 mA to 1 A, P_O ≤15 W V_I = 10.5 to 25 V	7.6	8	8.4	V
ΔV_O(1)	Line regulation	V_I = 10.5 to 25 V, T_J = 25°C			160	mV
		V_I = 11 to 17 V, T_J = 25°C			80	
ΔV_O(1)	Load regulation	I_O = 5 mA to 1.5 A, T_J = 25°C			160	mV
		I_O = 250 to 750 mA, T_J = 25°C			80	
I_d	Quiescent current	T_J = 25°C			8	mA
ΔI_d	Quiescent current change	I_O = 5 mA to 1 A			0.5	mA
		V_I = 10.5 to 25 V			1	
$\Delta V_O/\Delta T$	Output voltage drift	I_O = 5 mA		-0.8		mV/°C
eN	Output noise voltage	B =10 Hz to 100 KHz, T_J = 25°C		52		µV/V_O
SVR	Supply voltage rejection	V_I = 11.5 to 21.5 V, f = 120 Hz	56			dB
V_d	Dropout voltage	I_O = 1 A, T_J = 25°C		2		V
R_O	Output resistance	f = 1 KHz		16		mΩ
I_{sc}	Short circuit current	V_I = 35 V, T_J = 25°C		0.45		A
I_{scp}	Short circuit peak current	T_J = 25°C		2.2		A

1. Load and line regulation are specified at constant junction temperature. Changes in V_O due to heating effects must be taken into account separately. Pulse testing with low duty cycle is used.

Table 16. Electrical characteristics of L7885C (refer to the test circuits, T_J = 0 to 150°C, V_I = 14.5 V, I_O = 500 mA, C_I = 0.33 µF, C_O = 0.1 µF unless otherwise specified)

Symbol	Parameter	Test conditions	Min.	Typ.	Max.	Unit
V_O	Output voltage	T_J = 25°C	8.2	8.5	8.8	V
V_O	Output voltage	I_O = 5 mA to 1 A, $P_O \leq$15 W V_I = 11 to 26 V	8.1	8.5	8.9	V
ΔV_O(1)	Line regulation	V_I = 11 to 27 V, T_J = 25°C			160	mV
		V_I = 11.5 to 17.5 V, T_J = 25°C			80	
ΔV_O(1)	Load regulation	I_O = 5 mA to 1.5 A, T_J = 25°C			160	mV
		I_O = 250 to 750 mA, T_J = 25°C			80	
I_d	Quiescent current	T_J = 25°C			8	mA
ΔI_d	Quiescent current change	I_O = 5 mA to 1 A			0.5	mA
		V_I = 11 to 27 V			1	
$\Delta V_O/\Delta T$	Output voltage drift	I_O = 5 mA		-0.8		mV/°C
eN	Output noise voltage	B =10 Hz to 100 KHz, T_J = 25°C		55		µV/V_O
SVR	Supply voltage rejection	V_I = 12 to 22V, f = 120Hz	56			dB
V_d	Dropout voltage	I_O = 1 A, T_J = 25°C		2		V
R_O	Output resistance	f = 1 KHz		16		mΩ
I_{sc}	Short circuit current	V_I = 35 V, T_J = 25°C		0.45		A
I_{scp}	Short circuit peak current	T_J = 25°C		2.2		A

1. Load and line regulation are specified at constant junction temperature. Changes in V_O due to heating effects must be taken into account separately. Pulse testing with low duty cycle is used.

Table 17. Electrical characteristics of L7809C (refer to the test circuits, T_J = 0 to 150°C, V_I = 15 V, I_O = 500 mA, C_I = 0.33 µF, C_O = 0.1 µF unless otherwise specified)

Symbol	Parameter	Test conditions	Min.	Typ.	Max.	Unit
V_O	Output voltage	T_J = 25°C	8.64	9	9.36	V
V_O	Output voltage	I_O = 5 mA to 1 A, $P_O \leq$15 W V_I = 11.5 to 26 V	8.55	9	9.45	V
ΔV_O(1)	Line regulation	V_I = 11.5 to 26 V, T_J = 25°C			180	mV
		V_I = 12 to 18 V, T_J = 25°C			90	
ΔV_O(1)	Load regulation	I_O = 5 mA to 1.5 A, T_J = 25°C			180	mV
		I_O = 250 to 750 mA, T_J = 25°C			90	
I_d	Quiescent current	T_J = 25°C			8	mA
ΔI_d	Quiescent current change	I_O = 5 mA to 1 A			0.5	mA
		V_I = 11.5 to 26 V			1	
$\Delta V_O/\Delta T$	Output voltage drift	I_O = 5 mA		-1		mV/°C
eN	Output noise voltage	B =10 Hz to 100 KHz, T_J = 25°C		70		µV/V_O
SVR	Supply voltage rejection	V_I = 12 to 23 V, f = 120 Hz	55			dB
V_d	Dropout voltage	I_O = 1 A, T_J = 25°C		2		V
R_O	Output resistance	f = 1 KHz		17		mΩ
I_{sc}	Short circuit current	V_I = 35 V, T_J = 25°C		0.40		A
I_{scp}	Short circuit peak current	T_J = 25°C		2.2		A

1. Load and line regulation are specified at constant junction temperature. Changes in V_O due to heating effects must be taken into account separately. Pulse testing with low duty cycle is used.

Table 18. Electrical characteristics of L7810C (refer to the test circuits, T_J = 0 to 150°C, V_I = 15 V, I_O = 500 mA, C_I = 0.33 µF, C_O = 0.1 µF unless otherwise specified)

Symbol	Parameter	Test conditions	Min.	Typ.	Max.	Unit
V_O	Output voltage	T_J = 25°C	9.6	10	10.4	V
V_O	Output voltage	I_O = 5 mA to 1 A, $P_O \leq$15 W V_I = 12.5 to 26 V	9.5	10	10.5	V
ΔV_O(1)	Line regulation	V_I = 12.5 to 26 V, T_J = 25°C			200	mV
		V_I = 13.5 to 19 V, T_J = 25°C			100	
ΔV_O(1)	Load regulation	I_O = 5 mA to 1.5 A, T_J = 25°C			200	mV
		I_O = 250 to 750 mA, T_J = 25°C			100	
I_d	Quiescent current	T_J = 25°C			8	mA
ΔI_d	Quiescent current change	I_O = 5 mA to 1 A			0.5	mA
		V_I = 12.5 to 26 V			1	
$\Delta V_O/\Delta T$	Output voltage drift	I_O = 5 mA		-1		mV/°C
eN	Output noise voltage	B =10 Hz to 100 KHz, T_J = 25°C		70		µV/V_O
SVR	Supply voltage rejection	V_I = 13 to 23 V, f = 120 Hz	55			dB
V_d	Dropout voltage	I_O = 1 A, T_J = 25°C		2		V
R_O	Output resistance	f = 1 KHz		17		mΩ
I_{sc}	Short circuit current	V_I = 35 V, T_J = 25°C		0.40		A
I_{scp}	Short circuit peak current	T_J = 25°C		2.2		A

1. Load and line regulation are specified at constant junction temperature. Changes in V_O due to heating effects must be taken into account separately. Pulse testing with low duty cycle is used.

Table 19. Electrical characteristics of L7812C (refer to the test circuits, T_J = 0 to 150°C, V_I = 19 V, I_O = 500 mA, C_I = 0.33 µF, C_O = 0.1 µF unless otherwise specified)

Symbol	Parameter	Test conditions	Min.	Typ.	Max.	Unit
V_O	Output voltage	T_J = 25°C	11.5	12	12.5	V
V_O	Output voltage	I_O = 5 mA to 1 A, P_O ≤15 W V_I = 14.5 to 27 V	11.4	12	12.6	V
ΔV_O(1)	Line regulation	V_I = 14.5 to 30 V, T_J = 25°C			240	mV
		V_I = 16 to 22 V, T_J = 25°C			120	
ΔV_O(1)	Load regulation	I_O = 5 mA to 1.5 A, T_J = 25°C			240	mV
		I_O = 250 to 750 mA, T_J = 25°C			120	
I_d	Quiescent current	T_J = 25°C			8	mA
ΔI_d	Quiescent current change	I_O = 5 mA to 1 A			0.5	mA
		V_I = 14.5 to 30 V			1	
$\Delta V_O/\Delta T$	Output voltage drift	I_O = 5 mA		-1		mV/°C
eN	Output noise voltage	B =10 Hz to 100 KHz, T_J = 25°C		75		µV/V_O
SVR	Supply voltage rejection	V_I = 15 to 25 V, f = 120 Hz	55			dB
V_d	Dropout voltage	I_O = 1 A, T_J = 25°C		2		V
R_O	Output resistance	f = 1 KHz		18		mΩ
I_{sc}	Short circuit current	V_I = 35 V, T_J = 25°C		0.35		A
I_{scp}	Short circuit peak current	T_J = 25°C		2.2		A

1. Load and line regulation are specified at constant junction temperature. Changes in V_O due to heating effects must be taken into account separately. Pulse testing with low duty cycle is used.

Table 20. Electrical characteristics of L7815C (refer to the test circuits, T_J = 0 to 150°C, V_I = 23 V, I_O = 500 mA, C_I = 0.33 µF, C_O = 0.1 µF unless otherwise specified)

Symbol	Parameter	Test conditions	Min.	Typ.	Max.	Unit
V_O	Output voltage	T_J = 25°C	14.5	15	15.6	V
V_O	Output voltage	I_O = 5 mA to 1 A, P_O ≤15 W V_I = 17.5 to 30 V	14.25	15	15.75	V
ΔV_O(1)	Line regulation	V_I = 17.5 to 30 V, T_J = 25°C			300	mV
		V_I = 20 to 26 V, T_J = 25°C			150	
ΔV_O(1)	Load regulation	I_O = 5 mA to 1.5 A, T_J = 25°C			300	mV
		I_O = 250 to 750 mA, T_J = 25°C			150	
I_d	Quiescent current	T_J = 25°C			8	mA
ΔI_d	Quiescent current change	I_O = 5 mA to 1A			0.5	mA
		V_I = 17.5 to 30 V			1	
$\Delta V_O/\Delta T$	Output voltage drift	I_O = 5 mA		-1		mV/°C
eN	Output noise voltage	B =10 Hz to 100 KHz, T_J = 25°C		90		µV/V_O
SVR	Supply voltage rejection	V_I = 18.5 to 28.5 V, f = 120 Hz	54			dB
V_d	Dropout voltage	I_O = 1 A, T_J = 25°C		2		V
R_O	Output resistance	f = 1 KHz		19		mΩ
I_{sc}	Short circuit current	V_I = 35 V, T_J = 25°C		0.23		A
I_{scp}	Short circuit peak current	T_J = 25°C		2.2		A

1. Load and line regulation are specified at constant junction temperature. Changes in V_O due to heating effects must be taken into account separately. Pulse testing with low duty cycle is used.

Table 21. Electrical characteristics of L7818C (refer to the test circuits, T_J = 0 to 150°C, V_I = 26 V, I_O = 500 mA, C_I = 0.33 µF, C_O = 0.1 µF unless otherwise specified)

Symbol	Parameter	Test conditions	Min.	Typ.	Max.	Unit
V_O	Output voltage	T_J = 25°C	17.3	18	18.7	V
V_O	Output voltage	I_O = 5 mA to 1 A, $P_O \leq$15 W V_I = 21 to 33 V	17.1	18	18.9	V
ΔV_O(1)	Line regulation	V_I = 21 to 33 V, T_J = 25°C			360	mV
		V_I = 24 to 30 V, T_J = 25°C			180	
ΔV_O(1)	Load regulation	I_O = 5 mA to 1.5 A, T_J = 25°C			360	mV
		I_O = 250 to 750 mA, T_J = 25°C			180	
I_d	Quiescent current	T_J = 25°C			8	mA
ΔI_d	Quiescent current change	I_O = 5 mA to 1 A			0.5	mA
		V_I = 21 to 33 V			1	
$\Delta V_O/\Delta T$	Output voltage drift	I_O = 5 mA		-1		mV/°C
eN	Output noise voltage	B = 10 Hz to 100 KHz, T_J = 25°C		110		µV/V_O
SVR	Supply voltage rejection	V_I = 22 to 32 V, f = 120 Hz	53			dB
V_d	Dropout voltage	I_O = 1 A, T_J = 25°C		2		V
R_O	Output resistance	f = 1 KHz		22		mΩ
I_{sc}	Short circuit current	V_I = 35 V, T_J = 25°C		0.20		A
I_{scp}	Short circuit peak current	T_J = 25°C		2.1		A

1. Load and line regulation are specified at constant junction temperature. Changes in V_O due to heating effects must be taken into account separately. Pulse testing with low duty cycle is used.

Table 22. Electrical characteristics of L7820C (refer to the test circuits, T_J = 0 to 150°C, V_I = 28 V, I_O = 500 mA, C_I = 0.33 µF, C_O = 0.1 µF unless otherwise specified)

Symbol	Parameter	Test conditions	Min.	Typ.	Max.	Unit
V_O	Output voltage	T_J = 25°C	19.2	20	20.8	V
V_O	Output voltage	I_O = 5 mA to 1 A, P_O ≤15 W V_I = 23 to 35 V	19	20	21	V
ΔV_O(1)	Line regulation	V_I = 22.5 to 35 V, T_J = 25°C			400	mV
		V_I = 26 to 32 V, T_J = 25°C			200	
ΔV_O(1)	Load regulation	I_O = 5 mA to 1.5 A, T_J = 25°C			400	mV
		I_O = 250 to 750 mA, T_J = 25°C			200	
I_d	Quiescent current	T_J = 25°C			8	mA
ΔI_d	Quiescent current change	I_O = 5 mA to 1 A			0.5	mA
		V_I = 23 to 35 V			1	
$\Delta V_O/\Delta T$	Output voltage drift	I_O = 5 mA		-1		mV/°C
eN	Output noise voltage	B =10 Hz to 100 KHz, T_J = 25°C		150		µV/V_O
SVR	Supply voltage rejection	V_I = 24 to 35 V, f = 120 Hz	52			dB
V_d	Dropout voltage	I_O = 1 A, T_J = 25°C		2		V
R_O	Output resistance	f = 1 KHz		24		mΩ
I_{sc}	Short circuit current	V_I = 35 V, T_J = 25°C		0.18		A
I_{scp}	Short circuit peak current	T_J = 25°C		2.1		A

1. Load and line regulation are specified at constant junction temperature. Changes in V_O due to heating effects must be taken into account separately. Pulse testing with low duty cycle is used.

Table 23. Electrical characteristics of L7824C (refer to the test circuits, T_J = 0 to 150°C, V_I = 33 V, I_O = 500 mA, C_I = 0.33 µF, C_O = 0.1 µF unless otherwise specified)

Symbol	Parameter	Test conditions	Min.	Typ.	Max.	Unit
V_O	Output voltage	T_J = 25°C	23	24	25	V
V_O	Output voltage	I_O = 5 mA to 1 A, $P_O \leq$15 W V_I = 27 to 38 V	22.8	24	25.2	V
ΔV_O(1)	Line regulation	V_I = 27 to 38 V, T_J = 25°C			480	mV
		V_I = 30 to 36 V, T_J = 25°C			240	
ΔV_O(1)	Load regulation	I_O = 5 mA to 1.5 A, T_J = 25°C			480	mV
		I_O = 250 to 750 mA, T_J = 25°C			240	
I_d	Quiescent current	T_J = 25°C			8	mA
ΔI_d	Quiescent current change	I_O = 5 mA to 1 A			0.5	mA
		V_I = 27 to 38 V			1	
$\Delta V_O/\Delta T$	Output voltage drift	I_O = 5 mA		-1.5		mV/°C
eN	Output noise voltage	B = 10 Hz to 100 KHz, T_J = 25°C		170		µV/V_O
SVR	Supply voltage rejection	V_I = 28 to 38 V, f = 120 Hz	50			dB
V_d	Dropout voltage	I_O = 1 A, T_J = 25°C		2		V
R_O	Output resistance	f = 1 KHz		28		mΩ
I_{sc}	Short circuit current	V_I = 35 V, T_J = 25°C		0.15		A
I_{scp}	Short circuit peak current	T_J = 25°C		2.1		A

1. Load and line regulation are specified at constant junction temperature. Changes in V_O due to heating effects must be taken into account separately. Pulse testing with low duty cycle is used.

6 Typical performance

Figure 8. Dropout voltage vs junction temperature

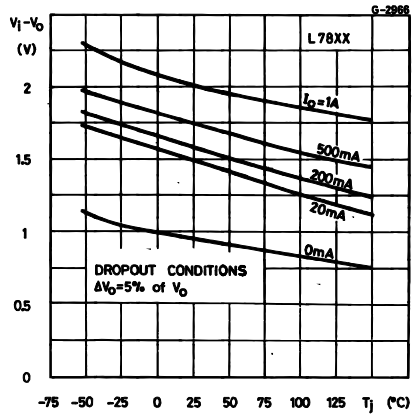

Figure 9. Peak output current vs input/output differential voltage

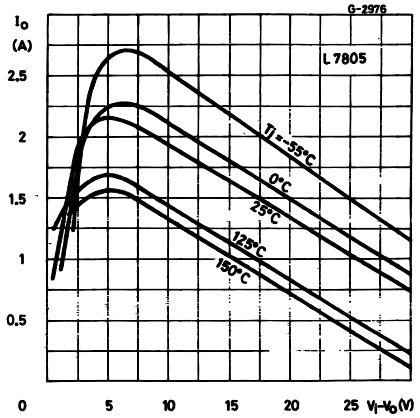

Figure 10. Supply voltage rejection vs frequency

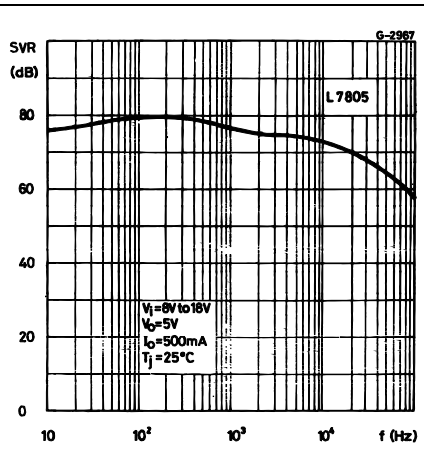

Figure 11. Output voltage vs junction temperature

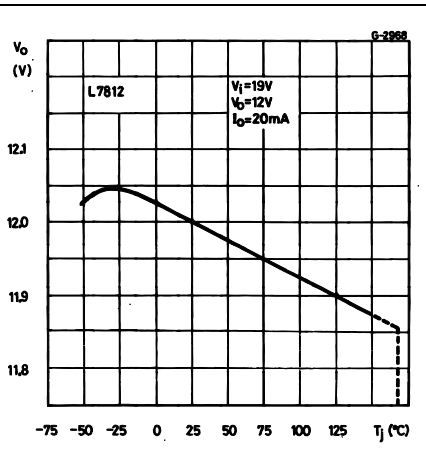

Figure 12. Output impedance vs frequency

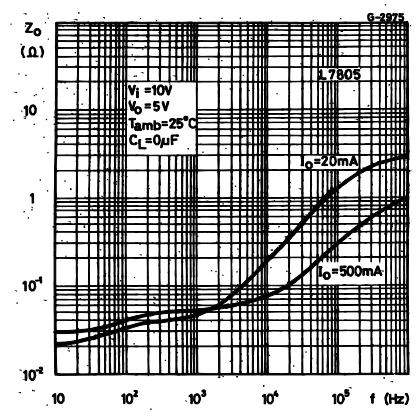

Figure 13. Quiescent current vs junction temp.

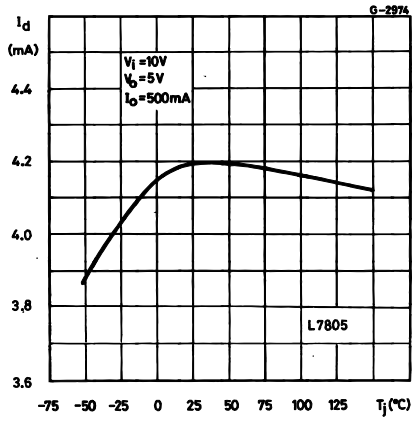

Figure 14. Load transient response

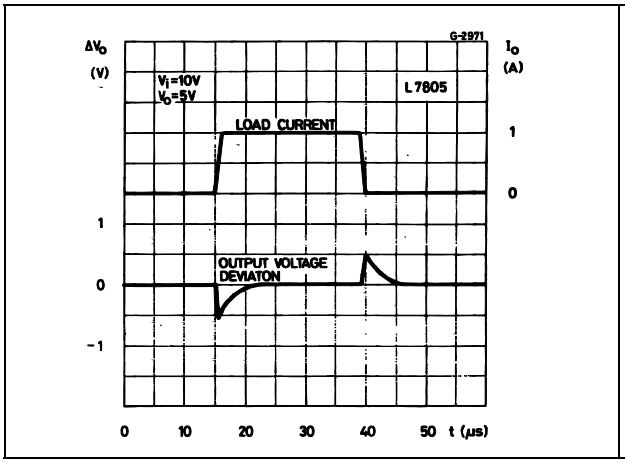

Figure 15. Line transient response

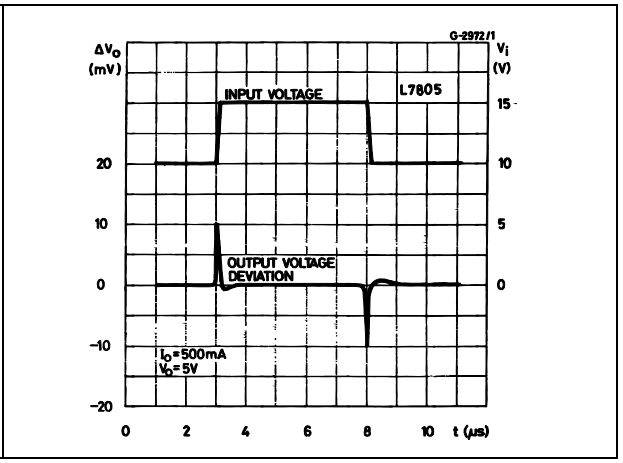

Figure 16. Quiescent current vs input voltage

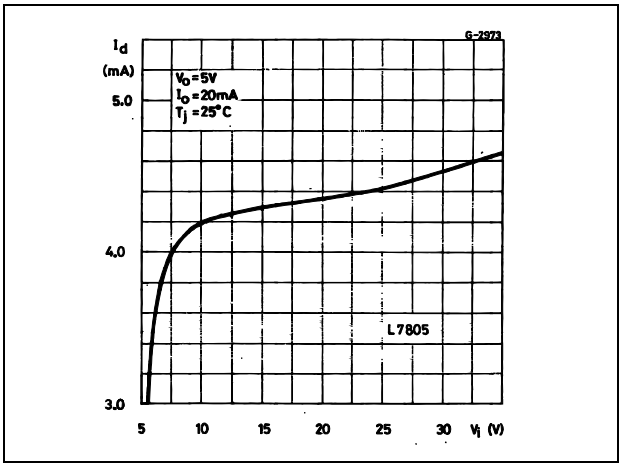

Figure 17. Fixed output regulator

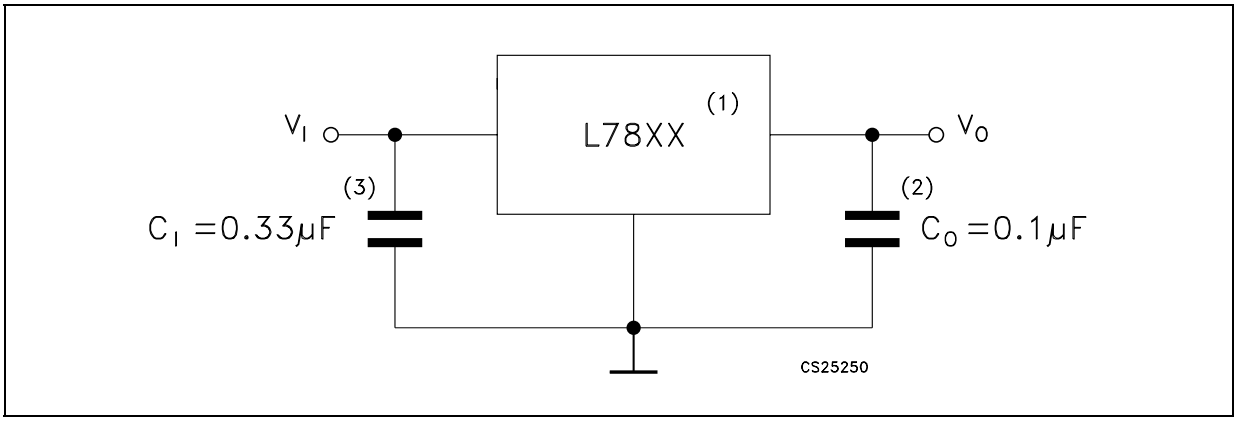

1. To specify an output voltage, substitute voltage value for "XX".
2. Although no output capacitor is need for stability, it does improve transient response.
3. Required if regulator is locate an appreciable distance from power supply filter.

Figure 18. Current regulator

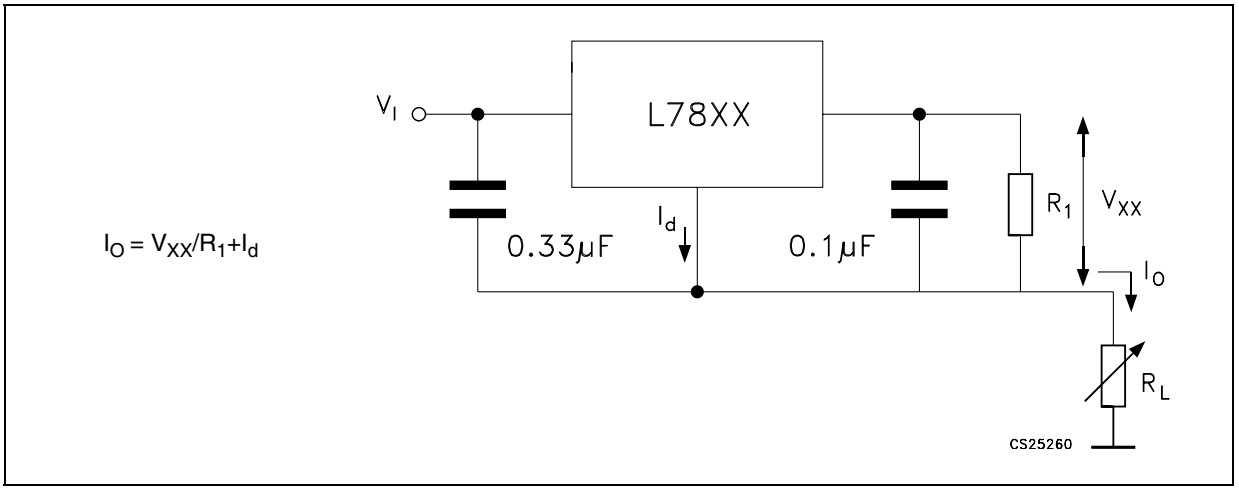

Figure 19. Circuit for increasing output voltage

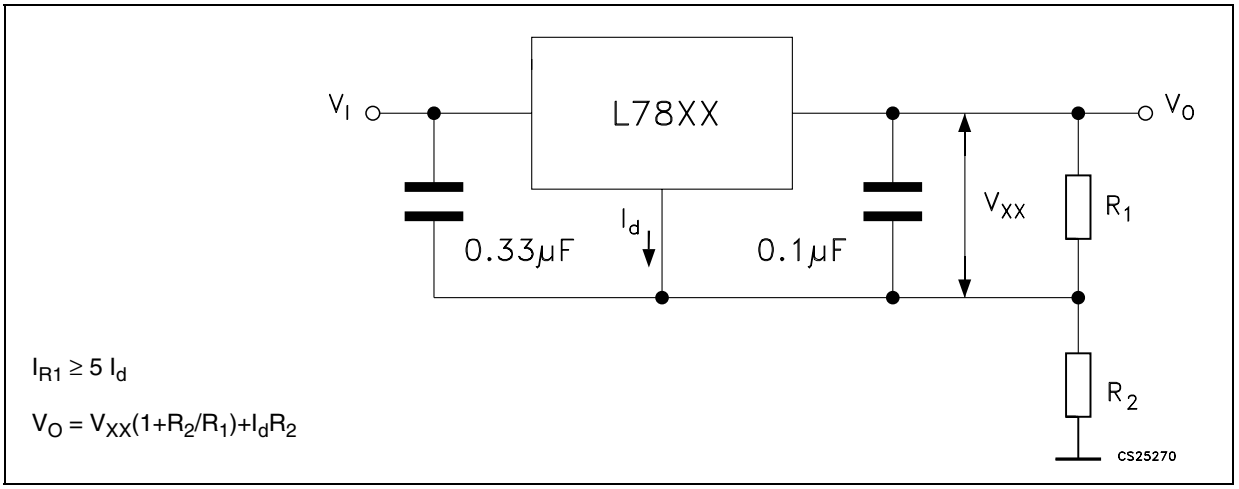

Figure 20. Adjustable output regulator (7 to 30V)

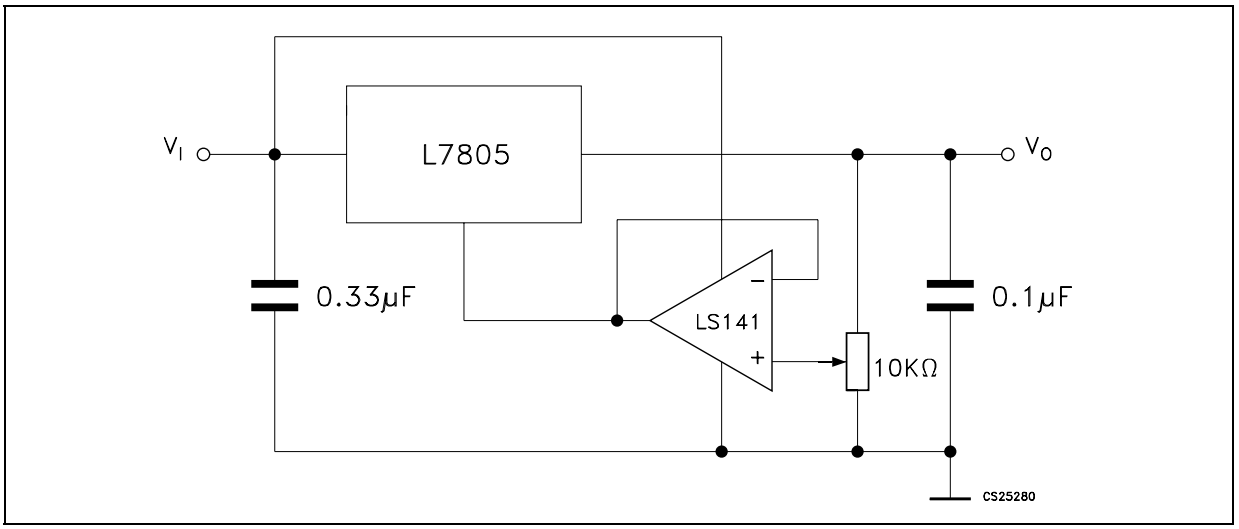

Figure 21. 0.5 to 10V Regulator

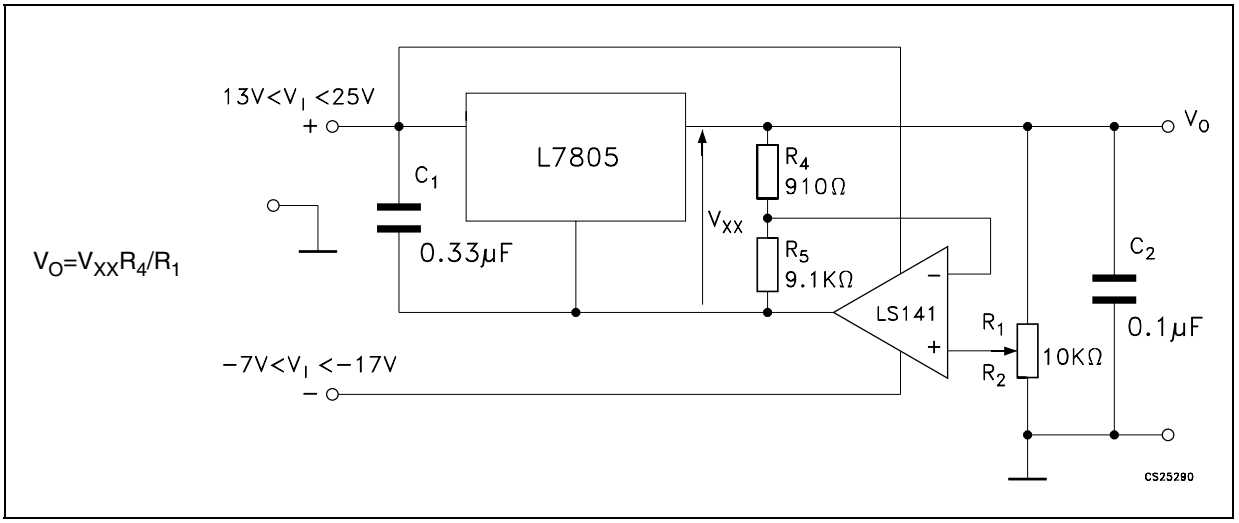

Figure 22. High current voltage regulator

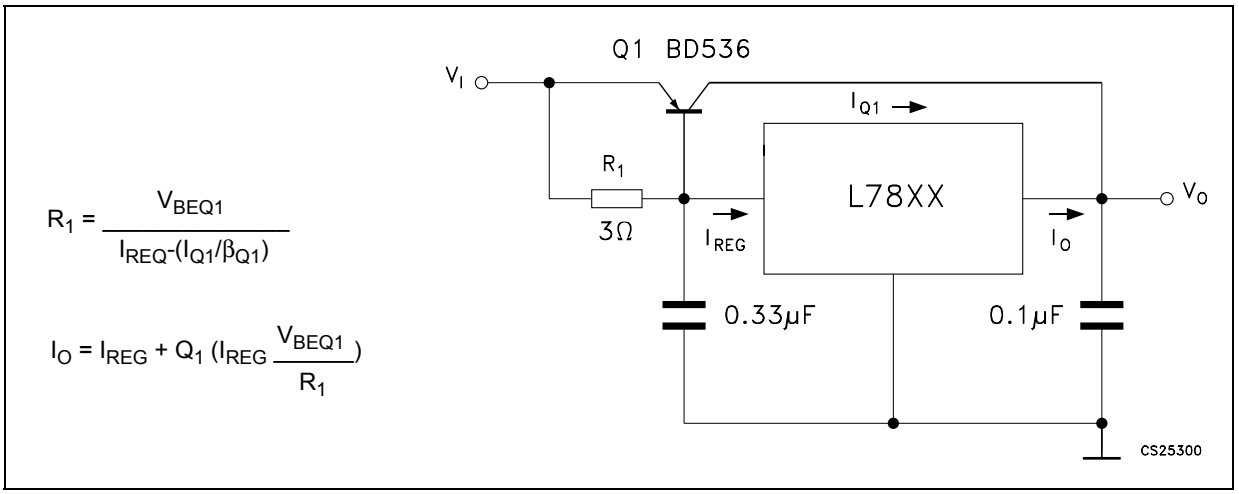

Figure 23. High output current with short circuit protection

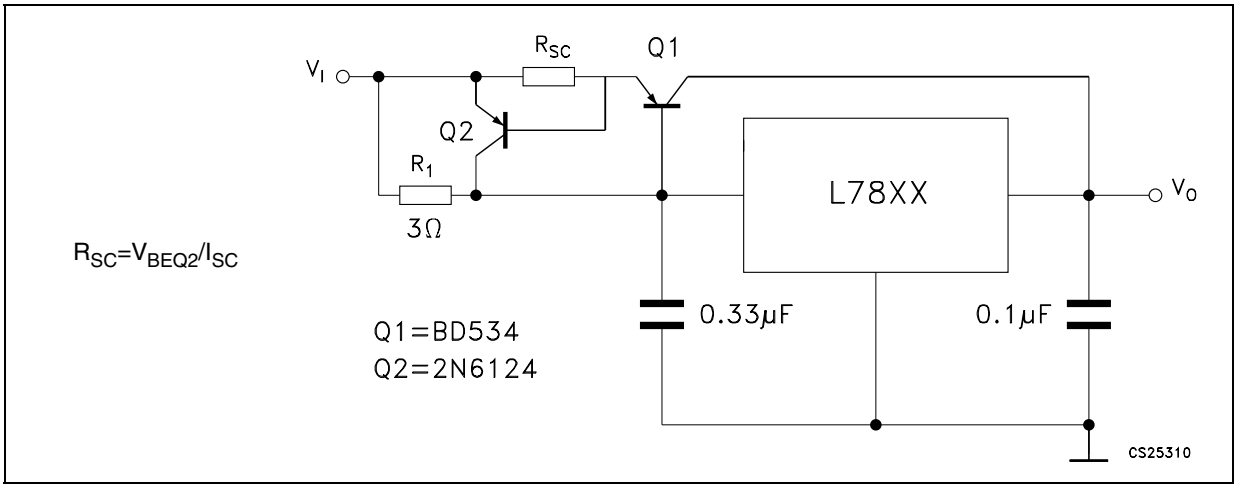

Figure 24. Tracking voltage regulator

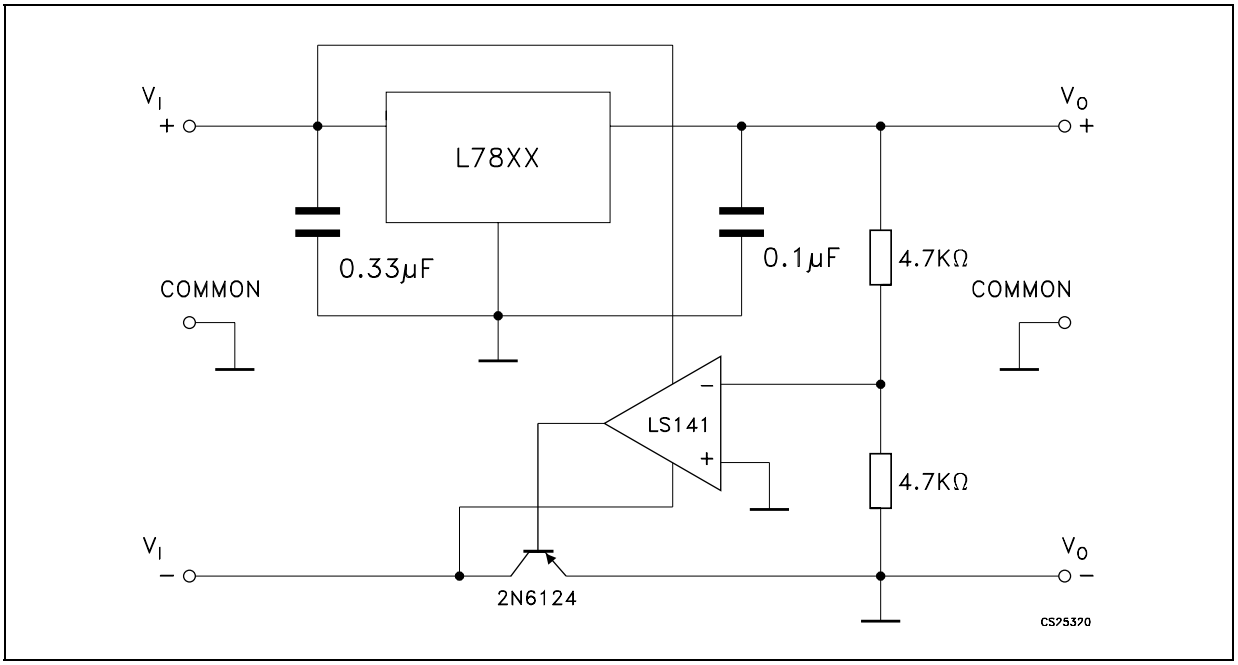

Figure 25. Split power supply (± 15V - 1 A)

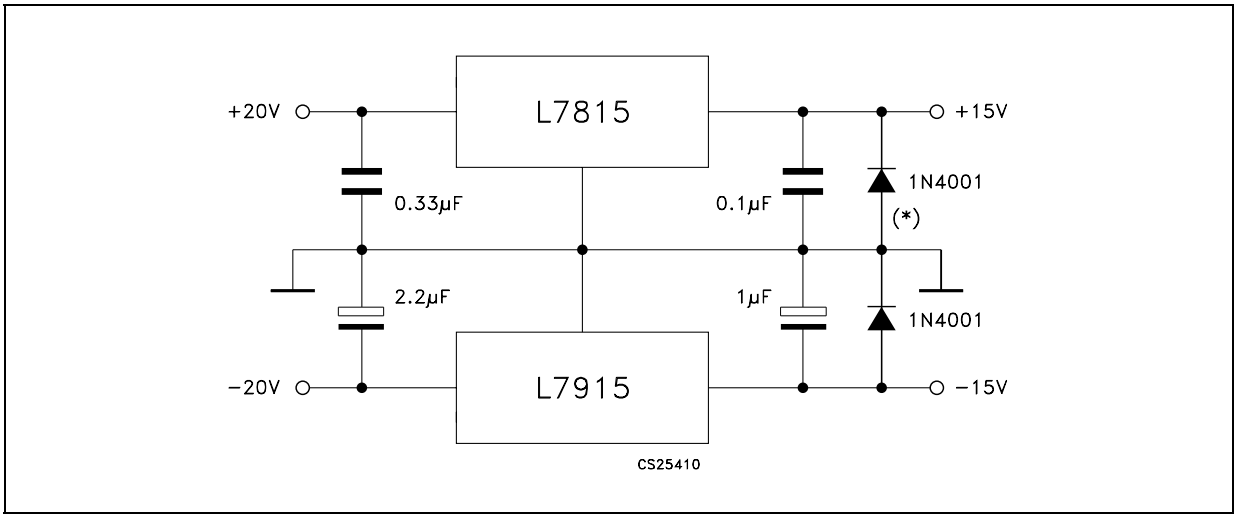

* Against potential latch-up problems.

Figure 26. Negative output voltage circuit

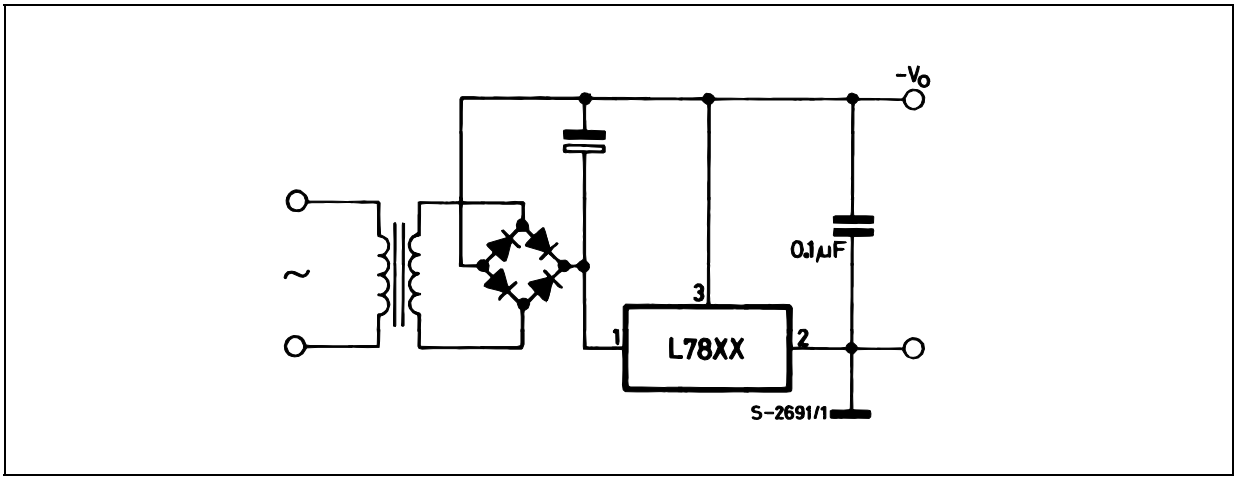

Figure 27. Switching regulator

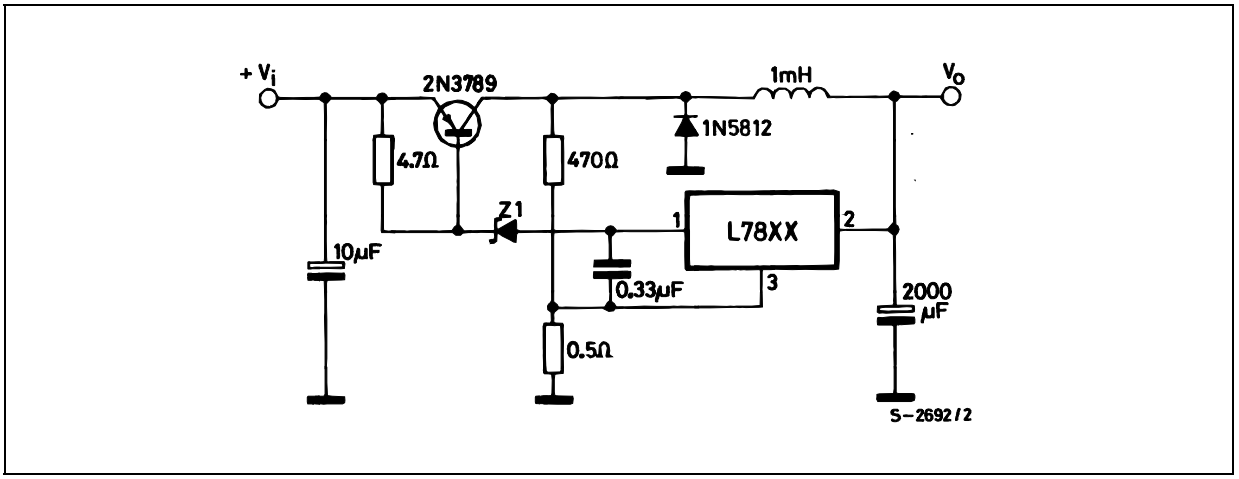

Figure 28. High input voltage circuit

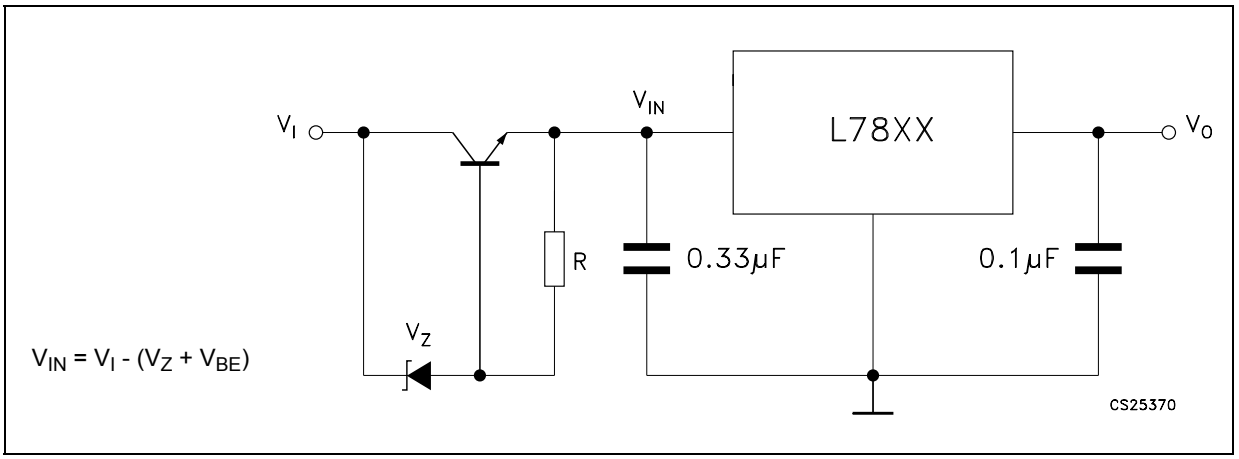

Figure 29. High input voltage circuit

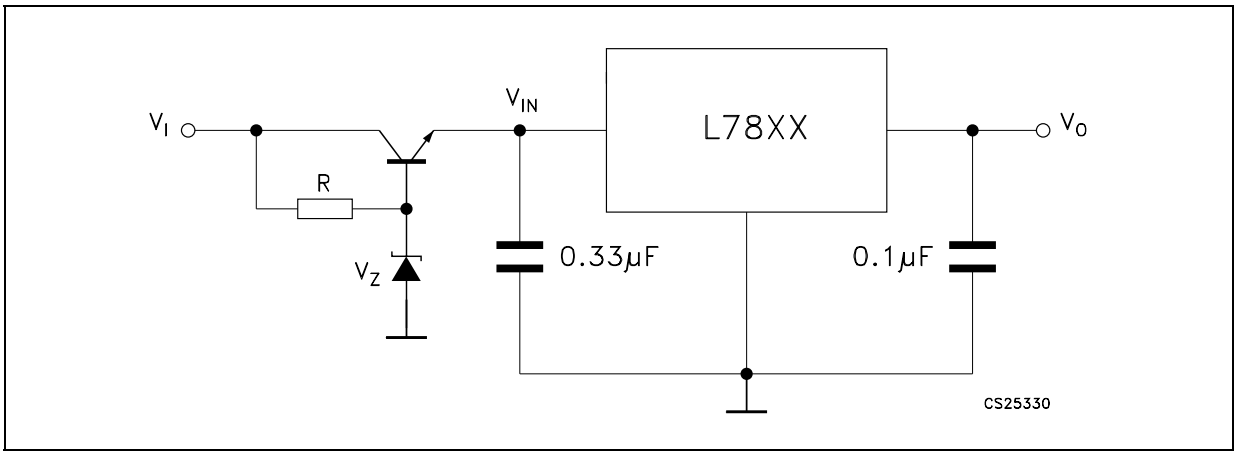

Figure 30. High output voltage regulator

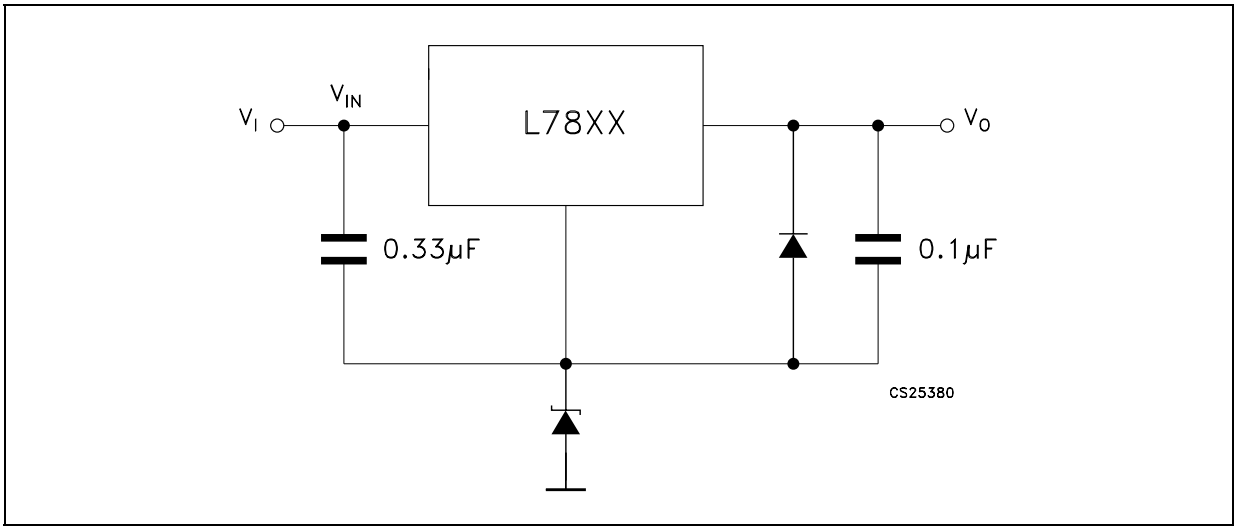

Figure 31. High input and output voltage

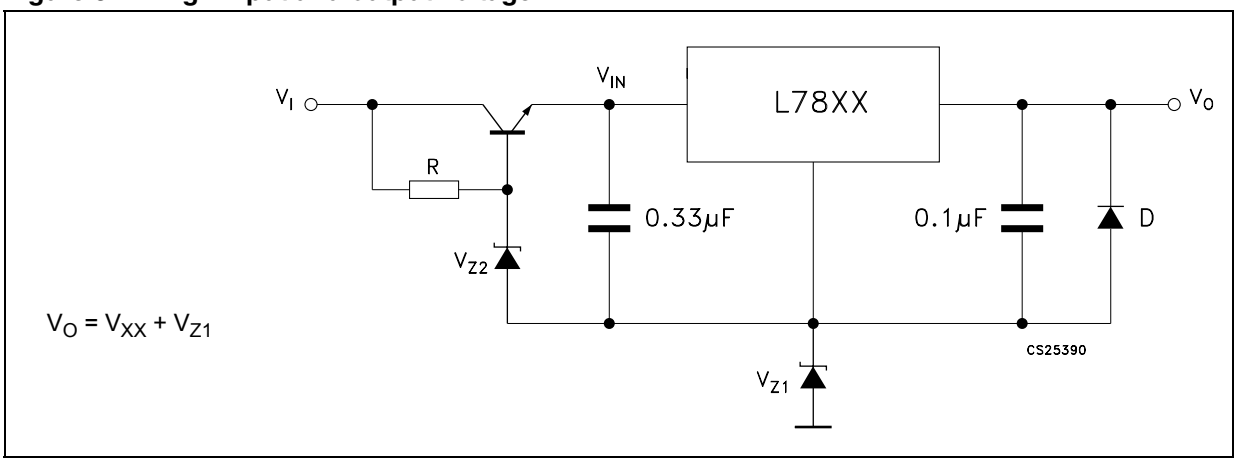

Figure 32. Reducing power dissipation with dropping resistor

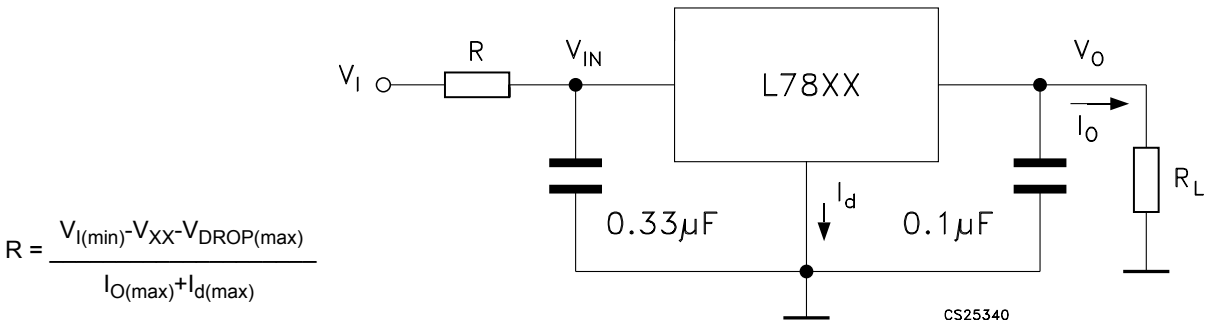

Figure 33. Remote shutdown

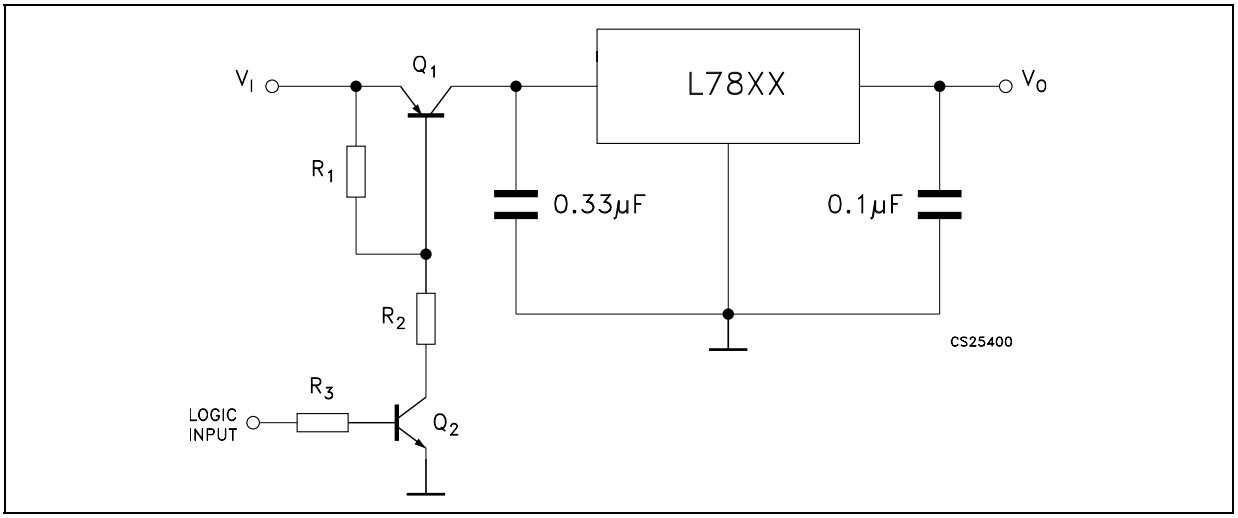

Figure 34. Power AM modulator (unity voltage gain, $I_O \leq 0.5$)

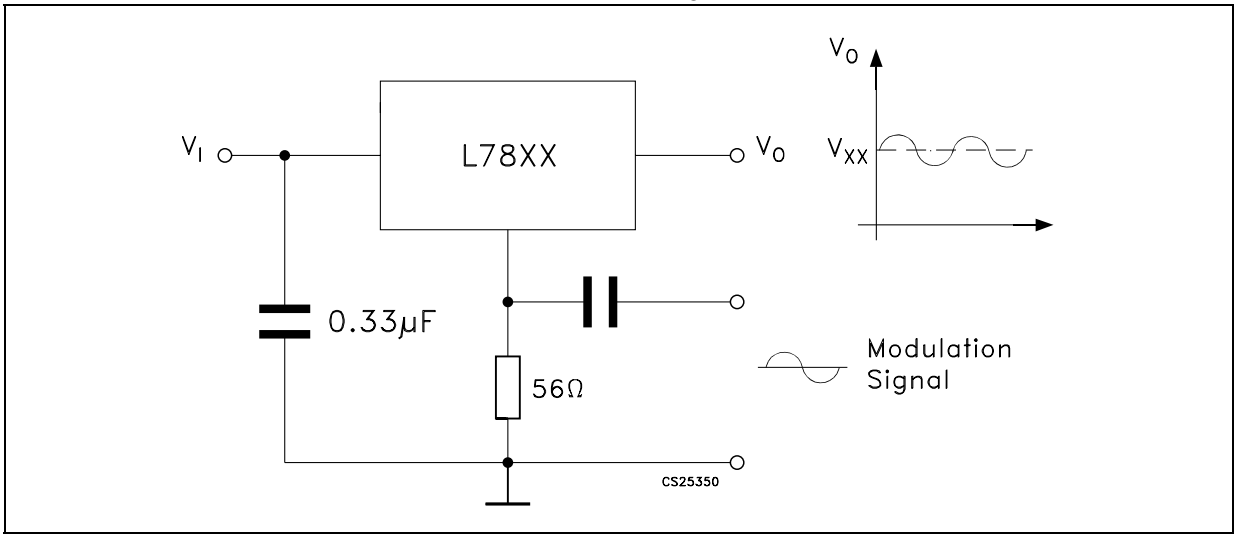

Note: The circuit performs well up to 100 KHz.

Figure 35. Adjustable output voltage with temperature compensation

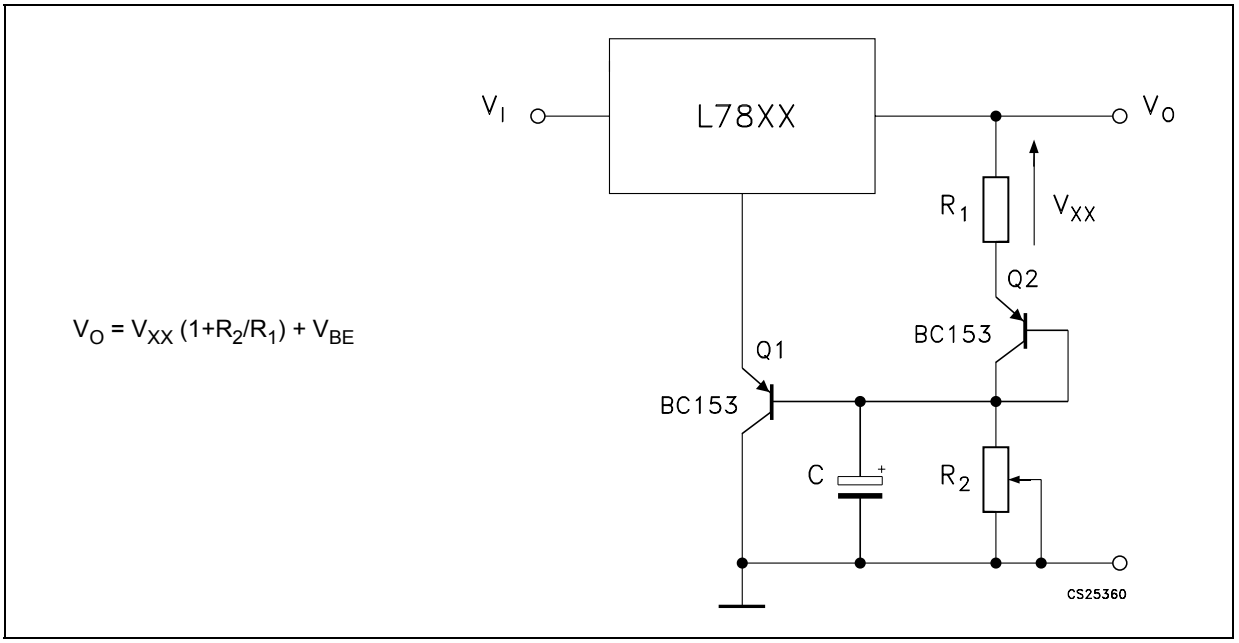

Note: Q_2 is connected as a diode in order to compensate the variation of the Q_1 V_{BE} with the temperature. C allows a slow rise time of the V_O.

Figure 36. Light controllers ($V_{Omin} = V_{XX} + V_{BE}$)

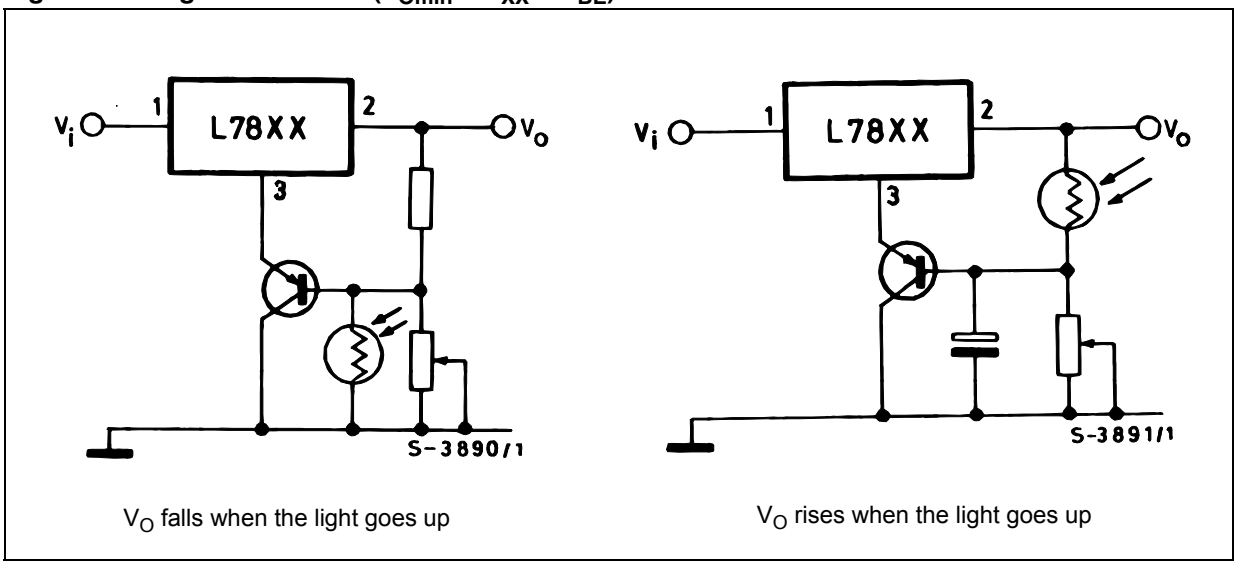

V_O falls when the light goes up

V_O rises when the light goes up

Figure 37. Protection against input short-circuit with high capacitance loads

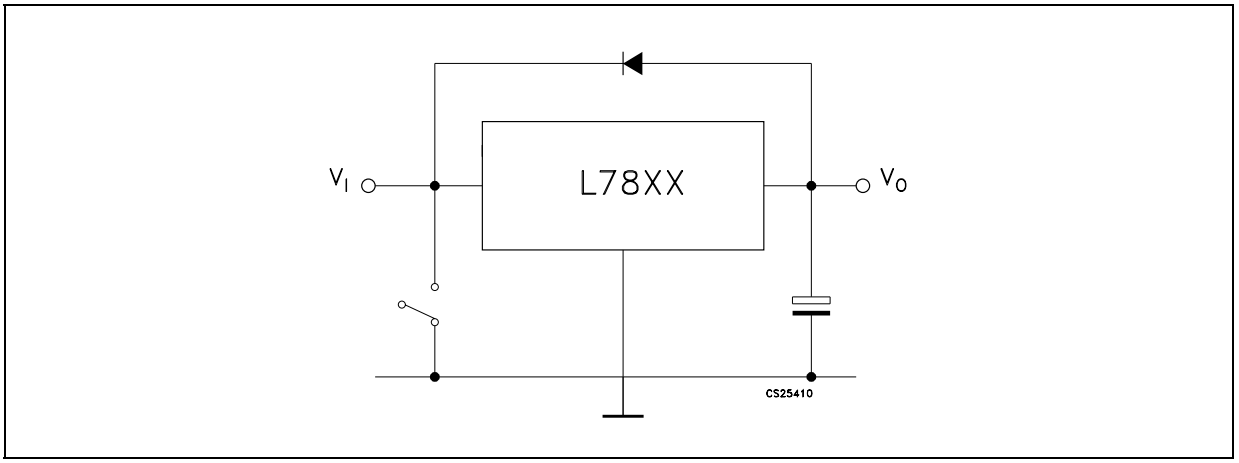

1. Application with high capacitance loads and an output voltage greater than 6 volts need an external diode (see fig. 32) to protect the device against input short circuit. In this case the input voltage falls rapidly while the output voltage decrease slowly. The capacitance discharges by means of the Base-Emitter junction of the series pass transistor in the regulator. If the energy is sufficiently high, the transistor may be destroyed. The external diode by-passes the current from the IC to ground.

7 Package mechanical data

In order to meet environmental requirements, ST offers these devices in ECOPACK® packages. These packages have a Lead-free second level interconnect. The category of second Level Interconnect is marked on the package and on the inner box label, in compliance with JEDEC Standard JESD97. The maximum ratings related to soldering conditions are also marked on the inner box label. ECOPACK is an ST trademark. ECOPACK specifications are available at: www.st.com.

TO-3 mechanical data

Dim.	mm.			inch.		
	Min.	Typ.	Max.	Min.	Typ.	Max.
A		11.85			0.466	
B	0.96	1.05	1.10	0.037	0.041	0.043
C			1.70			0.066
D			8.7			0.342
E			20.0			0.787
G		10.9			0.429	
N		16.9			0.665	
P			26.2			1.031
R	3.88		4.09	0.152		0.161
U			39.5			1.555
V		30.10			1.185	

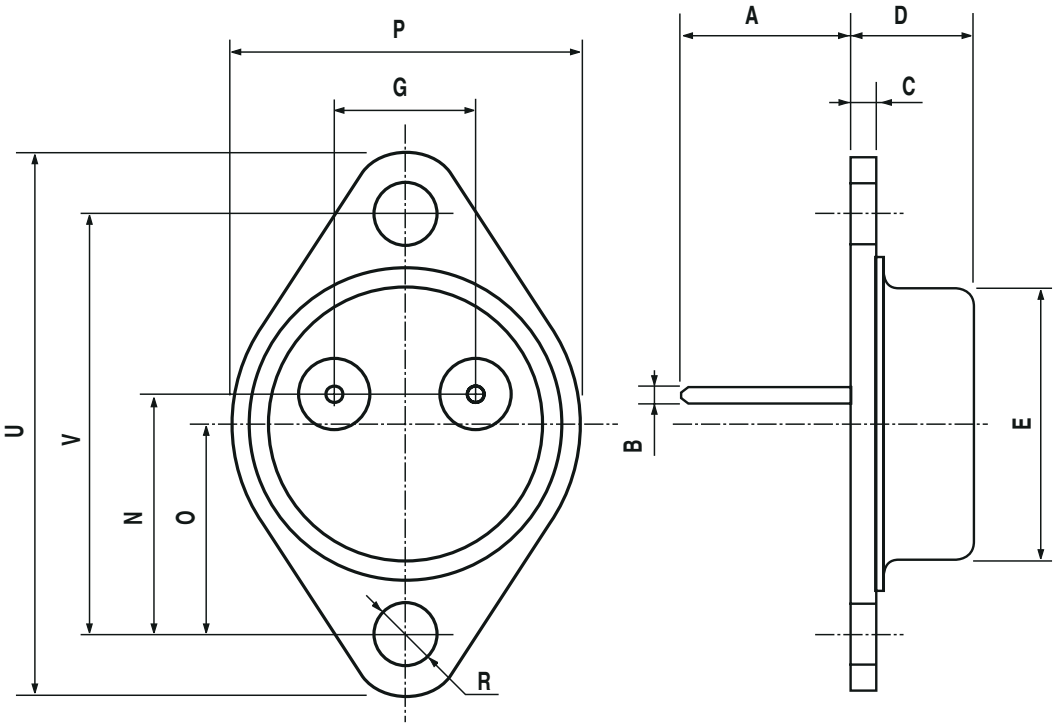

P003C/C

TO-220 (A type) mechanical data

Dim.	mm.			inch.		
	Min.	Typ.	Max.	Min.	Typ.	Max.
A	4.40		4.60	0.173		0.181
b	0.61		0.88	0.024		0.035
b1	1.15		1.70	0.045		0.067
c	0.49		0.70	0.019		0.028
D	15.25		15.75	0.600		0.620
E	10.0		10.40	0.394		0.409
e	2.4		2.7	0.094		0.106
e1	4.95		5.15	0.195		0.203
F	1.23		1.32	0.048		0.052
H1	6.2		6.6	0.244		0.260
J1	2.40		2.72	0.094		0.107
L	13.0		14.0	0.512		0.551
L1	3.5		3.93	0.138		0.155
L20		16.4			0.646	
L30		28.9			1.138	
ϕP	3.75		3.85	0.148		0.152
Q	2.65		2.95	0.104		0.116

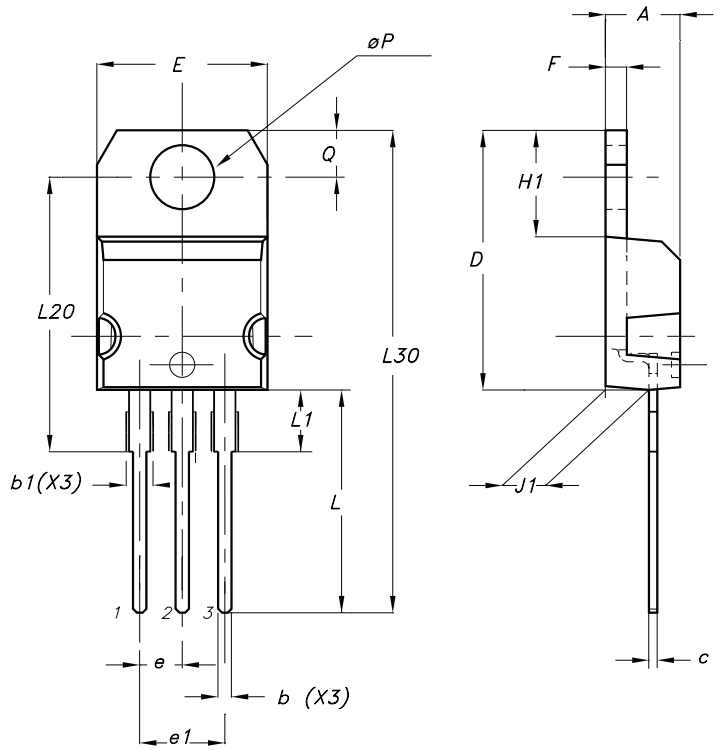

0015988/N

TO-220FP mechanical data

Dim.	mm.			inch.		
	Min.	Typ	Max.	Min.	Typ.	Max.
A	4.40		4.60	0.173		0.181
B	2.5		2.7	0.098		0.106
D	2.5		2.75	0.098		0.108
E	0.45		0.70	0.017		0.027
F	0.75		1	0.030		0.039
F1	1.15		1.50	0.045		0.059
F2	1.15		1.50	0.045		0.059
G	4.95		5.2	0.194		0.204
G1	2.4		2.7	0.094		0.106
H	10.0		10.40	0.393		0.409
L2		16			0.630	
L3	28.6		30.6	1.126		1.204
L4	9.8		10.6	0.385		0.417
L5	2.9		3.6	0.114		0.142
L6	15.9		16.4	0.626		0.645
L7	9		9.3	0.354		0.366
DIA.	3		3.2	0.118		0.126

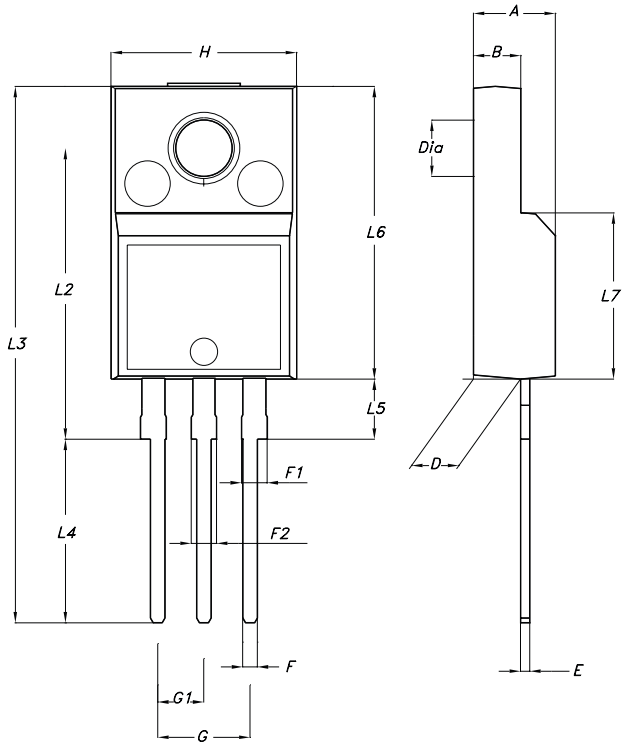

7012510A-H

Figure 38. Drawing dimension D²PAK (type STD-ST)

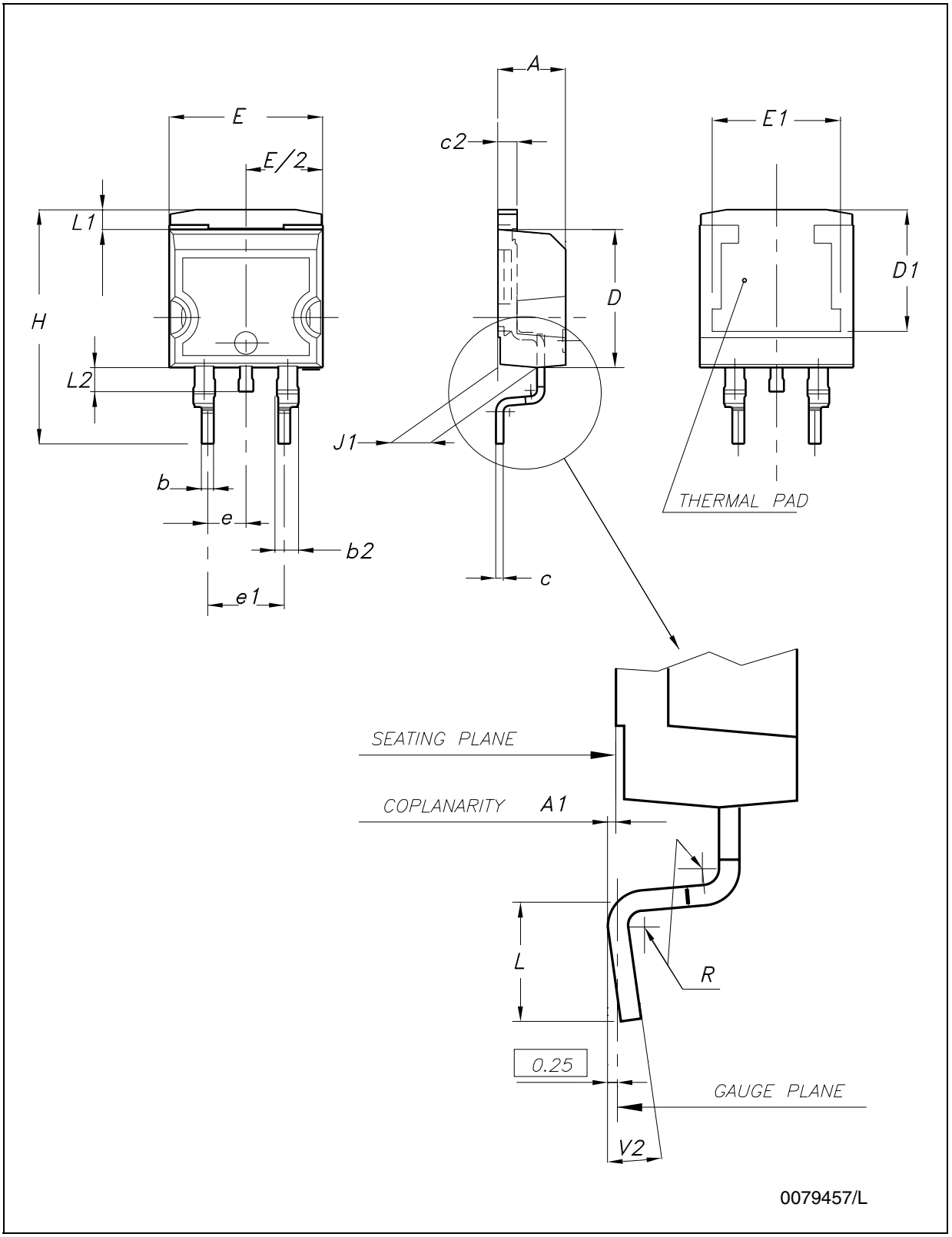

Figure 39. Drawing dimension D²PAK (type WOOSEOK-SUBCON.)

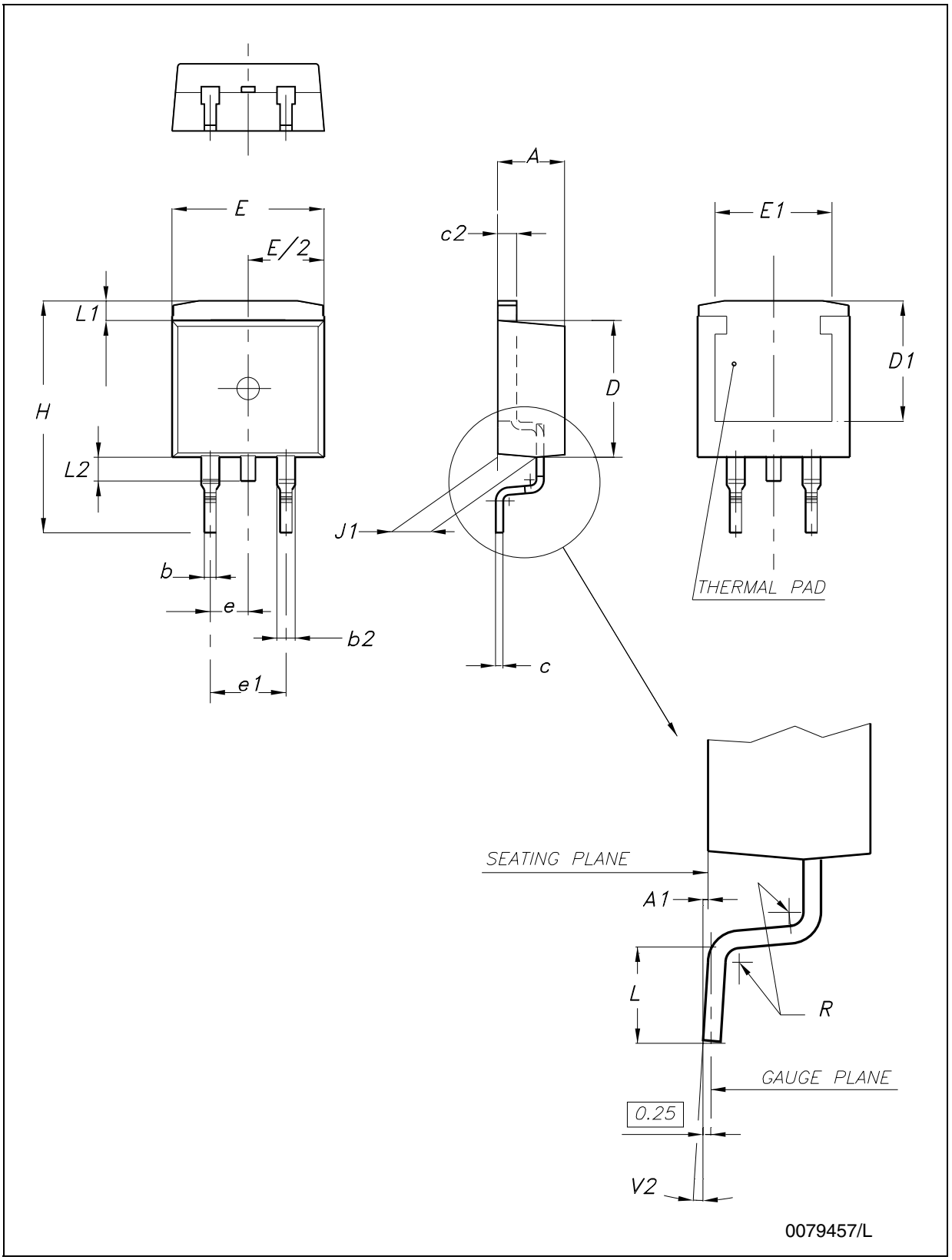

Table 24. D²PAK mechanical data

DIM.	TYPE STD-ST			TYPE WOOSEOK-SUBCON.		
	mm.			mm.		
	MIN.	TYP.	MAX.	MIN.	TYP.	MAX.
A	4.40		4.60	4.30		4.70
A1	0.03		0.23	0		0.20
b	0.70		0.93	0.70		0.90
b2	1.14		1.70	1.17		1.37
c	0.45		0.60	0.45	0.50	0.60
c2	1.23		1.36	1.25	1.30	1.40
D	8.95		9.35	9	9.20	9.40
D1	7.50			7.50		
E	10		10.40	9.80		10.20
E1	8.50			7.50		
e		2.54			2.54	
e1	4.88		5.28		5.08	
H	15		15.85	15	15.30	15.60
J1	2.49		2.69	2.20		2.60
L	2.29		2.79	1.79		2.79
L1	1.27		1.40	1		1.40
L2	1.30		1.75	1.20		1.60
R		0.4			0.30	
V2	0°		8°	0°		3°

Note: The D²PAK package coming from the subcontractor Wooseok is fully compatible with the ST's package suggested footprint.

Figure 40. D²PAK footprint recommended data

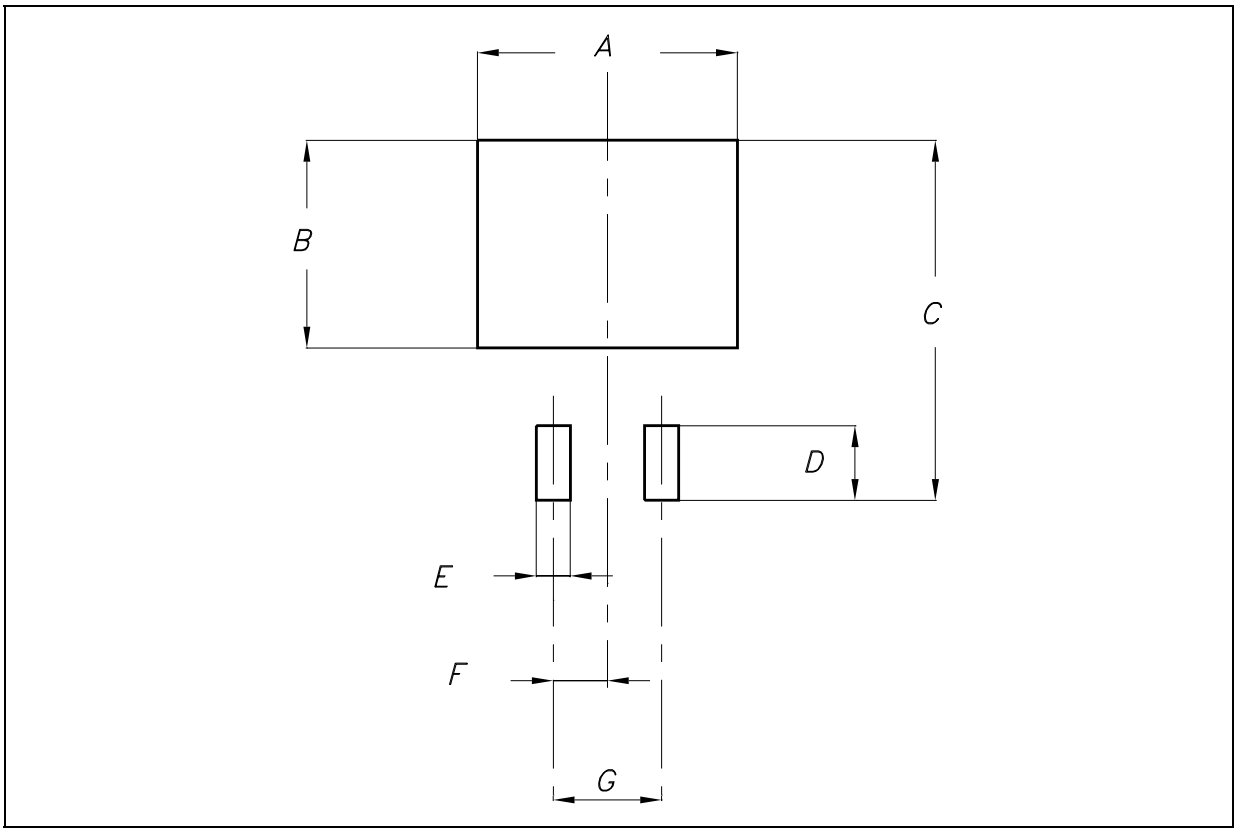

Table 25. Footprint data

VALUES		
	mm.	**inch.**
A	12.20	0.480
B	9.75	0.384
C	16.90	0.665
D	3.50	0.138
E	1.60	0.063
F	2.54	0.100
G	5.08	0.200

Tape & reel D^2PAK-P^2PAK-D^2PAK/A-P^2PAK/A mechanical data

Dim.	mm.			inch.		
	Min.	Typ.	Max.	Min.	Typ.	Max.
A			180			7.086
C	12.8	13.0	13.2	0.504	0.512	0.519
D	20.2			0.795		
N	60			2.362		
T			14.4			0.567
Ao	10.50	10.6	10.70	0.413	0.417	0.421
Bo	15.70	15.80	15.90	0.618	0.622	0.626
Ko	4.80	4.90	5.00	0.189	0.193	0.197
Po	3.9	4.0	4.1	0.153	0.157	0.161
P	11.9	12.0	12.1	0.468	0.472	0.476

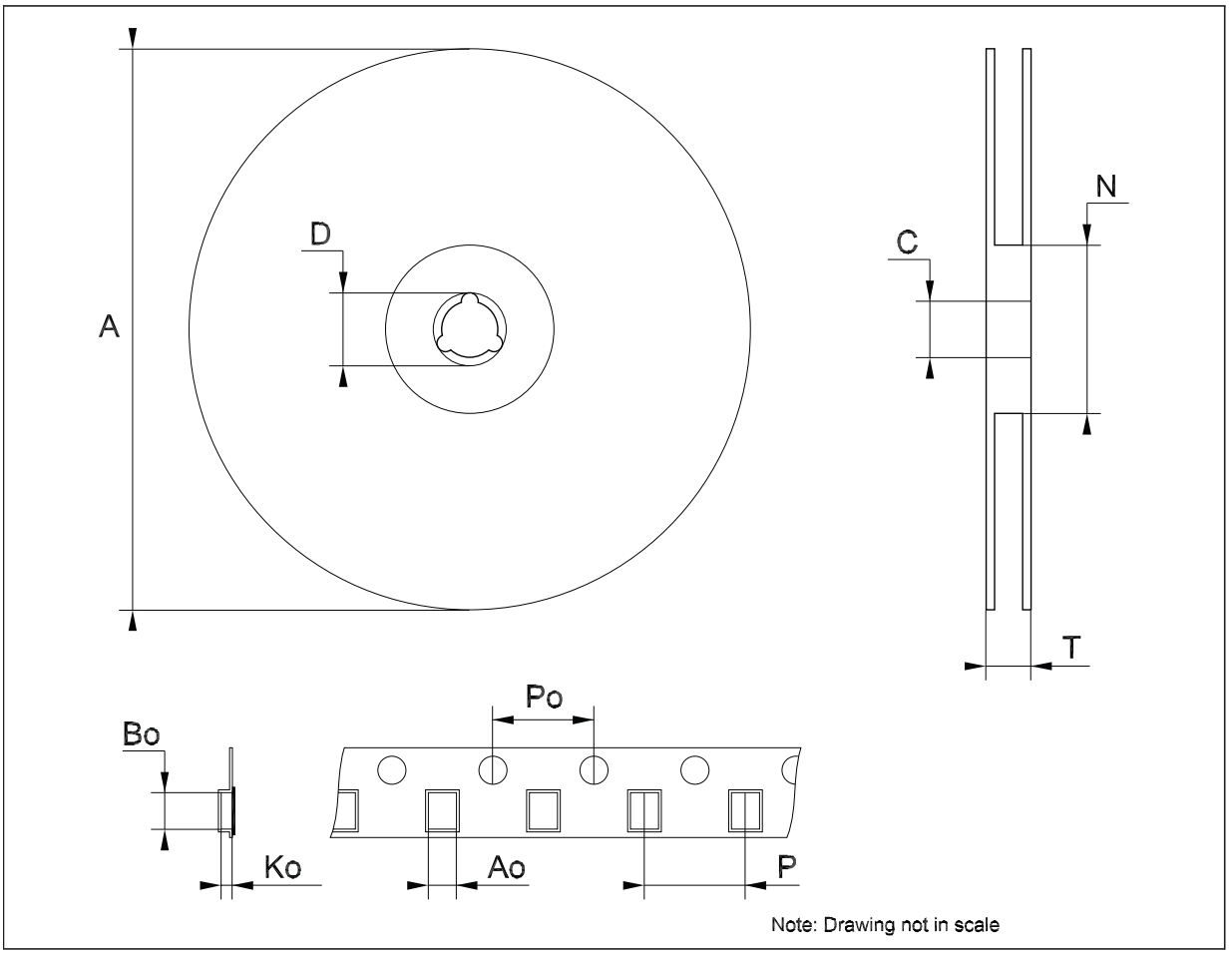

Note: Drawing not in scale

8 Order code

Table 26. Order code

Part numbers	Packaging			
	TO-220 (A Type)	D^2PAK	TO-220FP	TO-3
L7805				L7805T
L7805C	L7805CV	L7805CD2T-TR	L7805CP	L7805CT
L7852C	L7852CV	L7852CD2T-TR(1)	L7852CP(1)	L7852CT(1)
L7806C	L7806CV	L7806CD2T-TR		L7806CT
L7808C	L7808CV	L7808CD2T-TR	L7808CP	L7808CT
L7885C	L7885CV	L7885CD2T-TR(1)	L7885CP(1)	L7885CT(1)
L7809C	L7809CV	L7809CD2T-TR	L7809CP	L7809CT
L7810C	L7810CV	L7810CD2T-TR(1)		
L7812C	L7812CV	L7812CD2T-TR	L7812CP	L7812CT
L7815C	L7815CV	L7815CD2T-TR	L7815CP	L7815CT
L7818C	L7818CV	L7818CD2T-TR(1)		L7818CT
L7820C	L7820CV	L7820CD2T-TR(1)	L7820CP(1)	L7820CT(1)
L7824C	L7824CV	L7824CD2T-TR	L7824CP	L7824CT

1. Available on request.

9 Revision history

Table 27. Revision history

Date	Revision	Changes
21-Jun-2004	12	Document updating.
03-Aug-2006	13	Order codes has been updated and new template.
19-Jan-2007	14	D^2PAK mechanical data has been updated and add footprint data.
31-May-2007	15	Order codes has been updated.
29-Aug-2007	16	Added *Table 1.* in cover page.

Please Read Carefully:

Information in this document is provided solely in connection with ST products. STMicroelectronics NV and its subsidiaries (“ST”) reserve the right to make changes, corrections, modifications or improvements, to this document, and the products and services described herein at any time, without notice.

All ST products are sold pursuant to ST’s terms and conditions of sale.

Purchasers are solely responsible for the choice, selection and use of the ST products and services described herein, and ST assumes no liability whatsoever relating to the choice, selection or use of the ST products and services described herein.

No license, express or implied, by estoppel or otherwise, to any intellectual property rights is granted under this document. If any part of this document refers to any third party products or services it shall not be deemed a license grant by ST for the use of such third party products or services, or any intellectual property contained therein or considered as a warranty covering the use in any manner whatsoever of such third party products or services or any intellectual property contained therein.

UNLESS OTHERWISE SET FORTH IN ST’S TERMS AND CONDITIONS OF SALE ST DISCLAIMS ANY EXPRESS OR IMPLIED WARRANTY WITH RESPECT TO THE USE AND/OR SALE OF ST PRODUCTS INCLUDING WITHOUT LIMITATION IMPLIED WARRANTIES OF MERCHANTABILITY, FITNESS FOR A PARTICULAR PURPOSE (AND THEIR EQUIVALENTS UNDER THE LAWS OF ANY JURISDICTION), OR INFRINGEMENT OF ANY PATENT, COPYRIGHT OR OTHER INTELLECTUAL PROPERTY RIGHT.

UNLESS EXPRESSLY APPROVED IN WRITING BY AN AUTHORIZED ST REPRESENTATIVE, ST PRODUCTS ARE NOT RECOMMENDED, AUTHORIZED OR WARRANTED FOR USE IN MILITARY, AIR CRAFT, SPACE, LIFE SAVING, OR LIFE SUSTAINING APPLICATIONS, NOR IN PRODUCTS OR SYSTEMS WHERE FAILURE OR MALFUNCTION MAY RESULT IN PERSONAL INJURY, DEATH, OR SEVERE PROPERTY OR ENVIRONMENTAL DAMAGE. ST PRODUCTS WHICH ARE NOT SPECIFIED AS "AUTOMOTIVE GRADE" MAY ONLY BE USED IN AUTOMOTIVE APPLICATIONS AT USER’S OWN RISK.

Resale of ST products with provisions different from the statements and/or technical features set forth in this document shall immediately void any warranty granted by ST for the ST product or service described herein and shall not create or extend in any manner whatsoever, any liability of ST.

ST and the ST logo are trademarks or registered trademarks of ST in various countries.

Information in this document supersedes and replaces all information previously supplied.

The ST logo is a registered trademark of STMicroelectronics. All other names are the property of their respective owners.

© 2007 STMicroelectronics - All rights reserved

STMicroelectronics group of companies

Australia - Belgium - Brazil - Canada - China - Czech Republic - Finland - France - Germany - Hong Kong - India - Israel - Italy - Japan - Malaysia - Malta - Morocco - Singapore - Spain - Sweden - Switzerland - United Kingdom - United States of America

www.st.com