Ordering number : EN5162B

SANYO Semiconductors
DATA SHEET

LA6517
LA6517M
LA6518M

Monolithic Linear IC

2-Output Power Operational Amplifier

Overview

The LA6517, LA6517M, and LA6518M are 2-output power operational amplifiers developed for use in consumer and industrial equipment.

Features

- High output current (I_O max = 0.5A).
- High gain.
- Includes a current limiter.
- Wide operating voltage range (±2 to ±18V).
- Single-supply operation possible (4 to 36V).
- Thermal shutdown built in.

Specifications

Maximum Ratings at Ta = 25°C

Parameter	Symbol	Conditions	Ratings	Unit
Maximum supply voltage	V_{CC}/V_{EE}		±18	V
Differential input voltage	V_{ID}		30	V
Common-mode input voltage	V_{IN}		±15	V
Allowable power dissipation	Pd max	LA6517	1000	mW
		LA6517M	350	mW
		LA6518M	700	mW
Operating temperature	Topr		–20 to +75	°C
Storage temperature	Tstg		–55 to +150	°C

SANYO Semiconductor Co., Ltd.
TOKYO OFFICE Tokyo Bldg., 1-10, 1 Chome, Ueno, Taito-ku, TOKYO, 110-8534 JAPAN

Operating Conditions at Ta = 25°C

Parameter	Symbol	Conditions	Ratings	Unit
Recommended supply voltage	V_{CC}/V_{EE}		±2 to ±16	V

Electrical Characteristics at Ta = 25°C, V_{CC}/V_{EE} = ±15V

Parameter	Symbol	Conditions	min	typ	max	Unit
No-load current drain	I_{CC}			8	20	mA
Input offset voltage	V_{IO}	$R_S \leq 10k\Omega$		2	7	mV
Input offset current	I_{IO}			10	100	nA
Input bias current	I_B			100	300	nA
Common-mode input voltage range	V_{ICM}	LA6517, 6517M	−15		+13	V
		LA6518M	−14		+13	V
Common-mode signal rejection ratio	CMRR		65	80		dB
Maximum output voltage	V_O	R_L = 33Ω	±11	±12		V
Voltage gain	VG_O			85		dB
Slew rate	SR	G_V = 0, R_L = 33Ω, R = 10Ω, L = 0.1μF		0.15		V/μs
Supply voltage rejection ratio	SVR			30	300	μV/V
Limiting current (built in)	I_{SC}			0.5		A

Package Dimensions

unit : mm (typ)
3001D [LA6517]

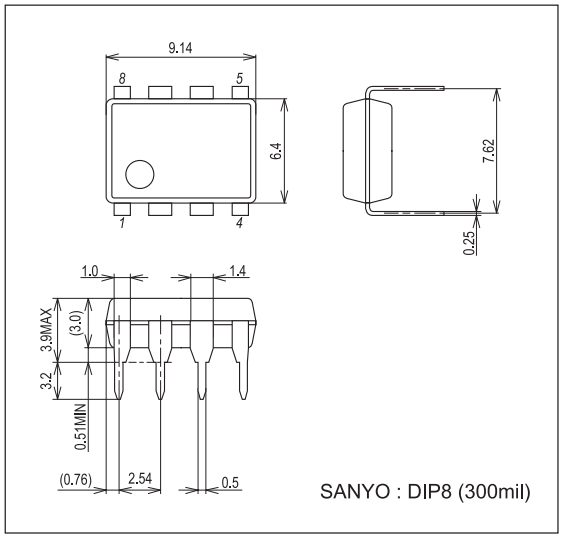

unit : mm (typ)
3035B [LA6517M]

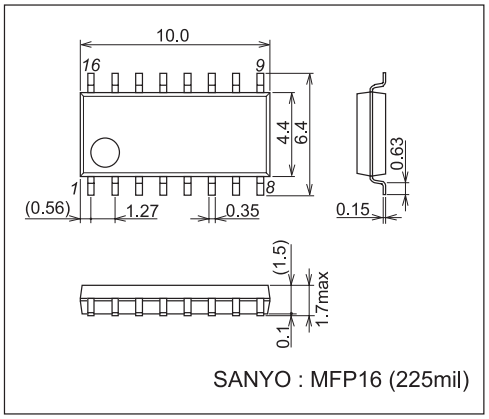

unit : mm (typ)
3097B [LA6518M]

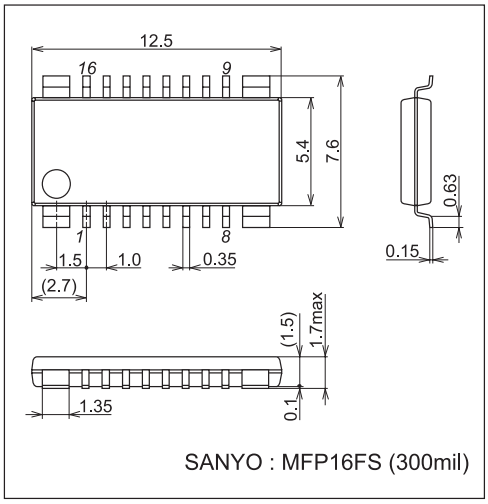

Block Diagram and Pin Assignments

[LA6517]

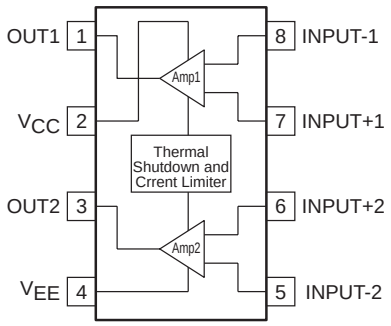

Top view

[LA6518M]

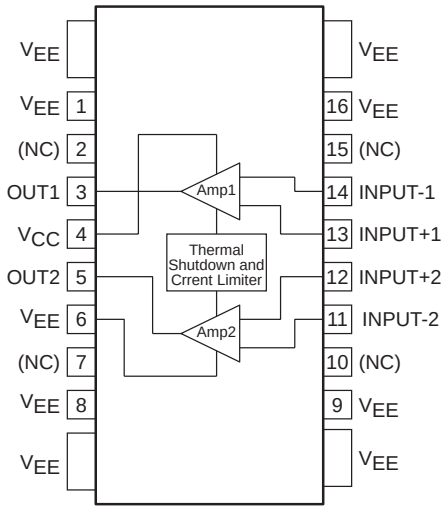

Top view

[LA6517M]

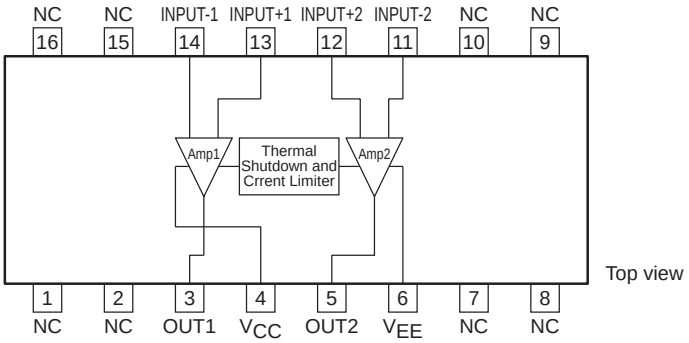

Top view

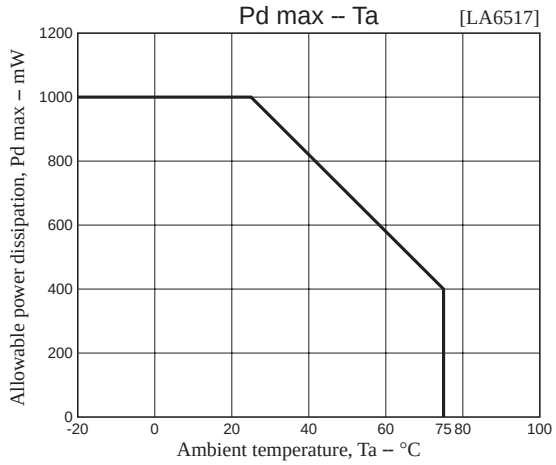

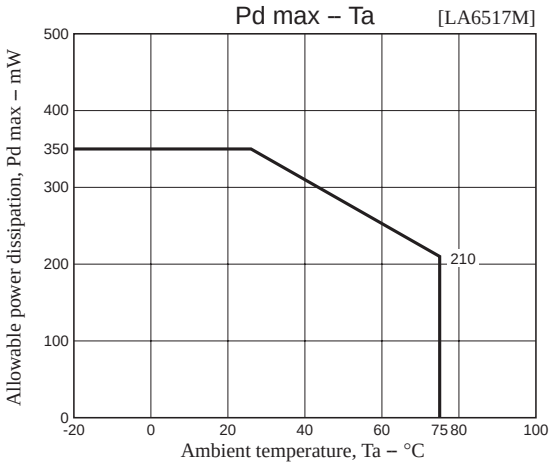

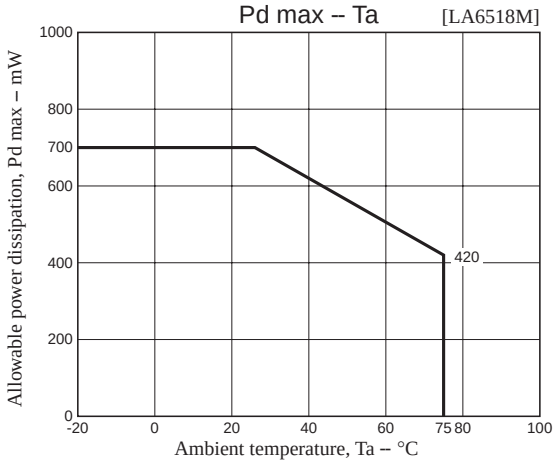

Test Circuits

1. V_{IO}, SVRR

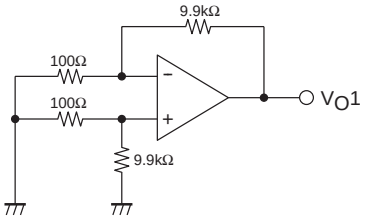

V_{IO} : V_{CC} / V_{EE} = ±15V

SVRR $\begin{cases} V_{CC} = 15V, 5V \\ V_{EE} = -5V, -15V \end{cases}$

$V_{IO} = V_{O}1 / 100$

$$\begin{matrix} SVR\ (+) \\ SVR\ (-) \end{matrix} = \left| \frac{\Delta V_{O}1}{100 \times 10V} \right|$$

2. V_O

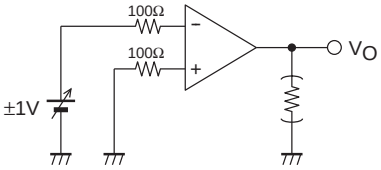

3. CMRR, V_{ICM}

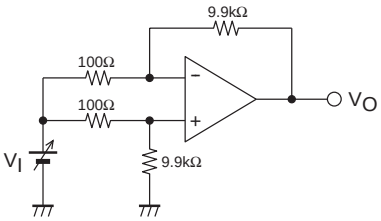

CMRR : V_I = ±7.5V

$$CMR = 20\log \frac{15 \times 100}{|\Delta V_O|}$$

4. I_B (–)

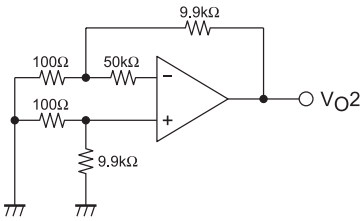

$$I_B\ (-) = \frac{|V_{O}2 - V_{O}1|}{50k\Omega \times 100}$$

5. I_B (+)

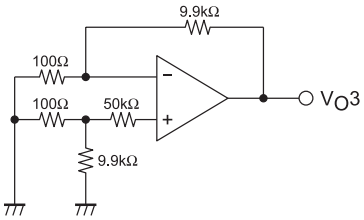

$$I_B(+) = \frac{|V_O3 - V_O1|}{50k\Omega \times 100}$$

6. I_{IO}

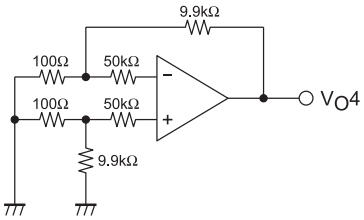

$$I_{IO} = \frac{|V_O4 - V_O1|}{50k\Omega \times 100}$$

7. I_{CC}

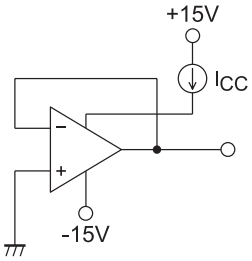

8. SR

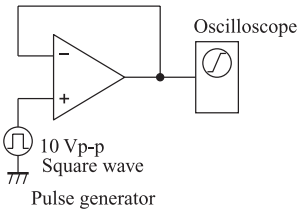

9. VG_O

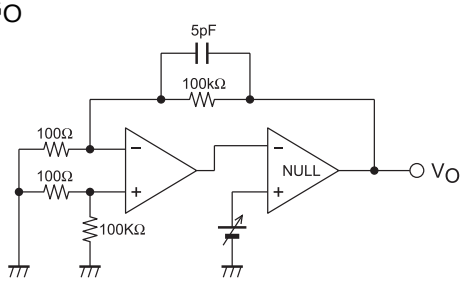

$$VG_O = 20\log\frac{1000 \times 20}{\Delta V_O}$$

This catalog provides information as of May, 2008. Specifications and information herein are subject to change without notice.