Ordering number : EN920F

SANYO Semiconductors
DATA SHEET

LA7910 — Monolithic Linear IC For TV Tuner Band Selector

DISCONTINUED PRODUCT

Overview

The LA7910 is an IC for tuner band selection of electronic tuning type television set. This IC is used for producing the VHF channel “L” band power supply/VHF channel “H” band power supply/UHF channel power supply for tuner and the CATV power supply according to the band select signal of 2 inputs.

Features

- 2 inputs and 4 outputs.
- Low output saturation voltage : 0.25V typ., I_O = 60mA.
- Compact 9-pin single-end package.

Functions

- VHF “L” band power supply output.
- VHF “H” band power supply output.
- UHF power supply output.
- CATV power supply output.

Specifications

Maximum Ratings at Ta = 25°C

Parameter	Symbol	Conditions	Ratings	Unit
Maximum supply voltage	V_9 max		15	V
Maximum load current	I_1 max, I_2 max, I_7 max, I_8 max		-60	mA
Maximum supply current $V_{CC}2$	I_6 max		10	mA
Input current	I_3 max, I_4 max		2	mA
Allowable power dissipation	Pd max		200	mW
Operating temperature	Topr		-20 to +85	°C
Storage temperature	Tstg		-55 to +125	°C

■ Any and all SANYO Semiconductor Co.,Ltd. products described or contained herein are, with regard to "standard application", intended for the use as general electronics equipment (home appliances, AV equipment, communication device, office equipment, industrial equipment etc.). The products mentioned herein shall not be intended for use for any "special application" (medical equipment whose purpose is to sustain life, aerospace instrument, nuclear control device, burning appliances, transportation machine, traffic signal system, safety equipment etc.) that shall require extremely high level of reliability and can directly threaten human lives in case of failure or malfunction of the product or may cause harm to human bodies, nor shall they grant any guarantee thereof. If you should intend to use our products for applications outside the standard applications of our customer who is considering such use and/or outside the scope of our intended standard applications, please consult with us prior to the intended use. If there is no consultation or inquiry before the intended use, our customer shall be solely responsible for the use.

■ Specifications of any and all SANYO Semiconductor Co.,Ltd. products described or contained herein stipulate the performance, characteristics, and functions of the described products in the independent state, and are not guarantees of the performance, characteristics, and functions of the described products as mounted in the customer's products or equipment. To verify symptoms and states that cannot be evaluated in an independent device, the customer should always evaluate and test devices mounted in the customer's products or equipment.

SANYO Semiconductor Co., Ltd.
TOKYO OFFICE Tokyo Bldg., 1-10, 1 Chome, Ueno, Taito-ku, TOKYO, 110-8534 JAPAN

Electrical Characteristics at Ta = 25°C

Parameter	Symbol	Conditions	Ratings			Unit
			min	typ	max	
Current drain	I_1, I_2, I_7, I_8				60	mA
Output saturation voltage	$V_{O\ (sat)}$	V_9 = 12V, I_6 = 5mA, I_O = 60mA	0	0.25	0.7	V
Input high-level threshold voltage	V_{TH}				3.0	V
Input low-level threshold voltage	V_{TL}		0.8			V
Output leakage current	I_1, I_2, I_7, I_8	Ta ≤ 70°C			50	μA

* Current flowing into the IC is defined as positive ; current flowing out is defined as negative.

Package Dimensions

unit : mm (typ)

3017D

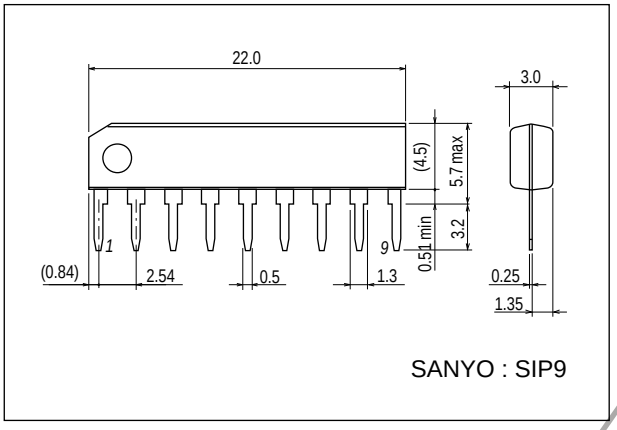

Truth Table

Input		Output			
Pin 3	Pin 4	Pin 1	Pin 2	Pin 7	Pin 8
L	L	H	Z	Z	Z
H	L	Z	H	Z	Z
L	H	Z	Z	H	Z
H	H	Z	Z	Z	H

Z : High impedance

Input threshold voltage : V_{TL} = 0.8V, V_{TH} = 3V

Sample Application Circuit

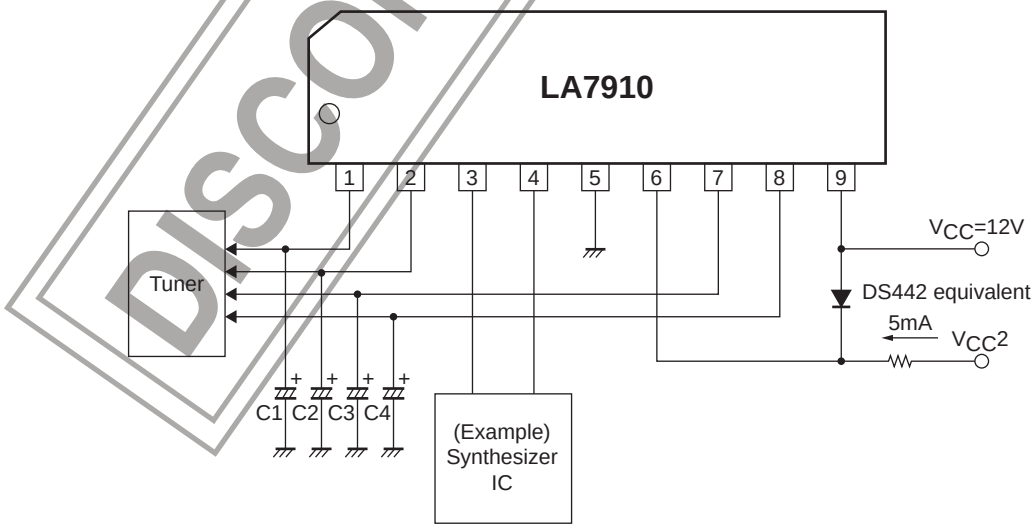

Proper cares in using the IC

1. When using a capacitive load, connect a diode across pins 6 and 9 as shown above.
2. The value of load capacitors C1, C2, C3, C4 must not exceed 22μF.

DISCONTINUED PRODUCT

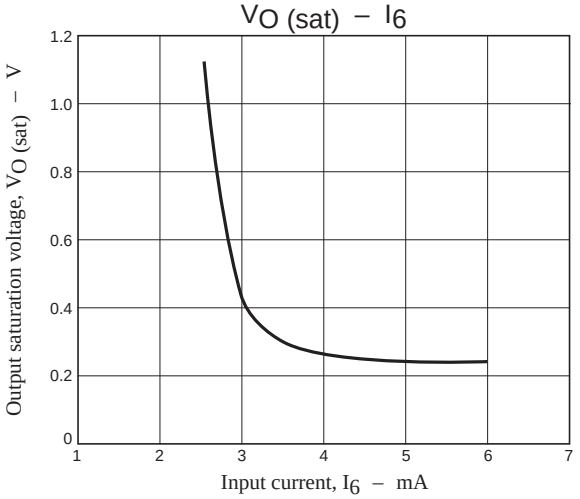

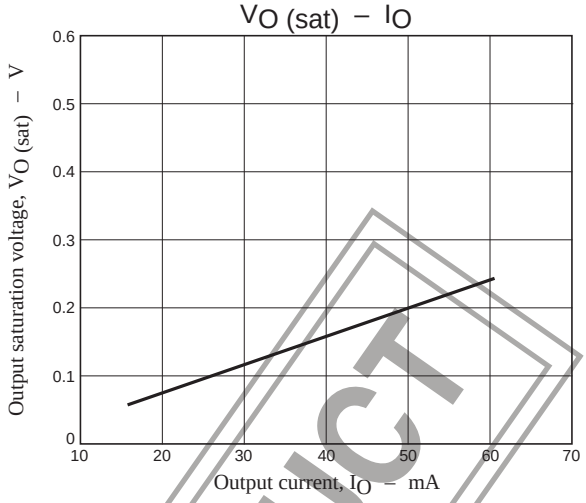

DISCONTINUED PRODUCT

- SANYO Semiconductor Co.,Ltd. assumes no responsibility for equipment failures that result from using products at values that exceed, even momentarily, rated values (such as maximum ratings, operating condition ranges, or other parameters) listed in products specifications of any and all SANYO Semiconductor Co.,Ltd. products described or contained herein.
- SANYO Semiconductor Co.,Ltd. strives to supply high-quality high-reliability products, however, any and all semiconductor products fail or malfunction with some probability. It is possible that these probabilistic failures or malfunction could give rise to accidents or events that could endanger human lives, trouble that could give rise to smoke or fire, or accidents that could cause damage to other property. When designing equipment, adopt safety measures so that these kinds of accidents or events cannot occur. Such measures include but are not limited to protective circuits and error prevention circuits for safe design, redundant design, and structural design.
- In the event that any or all SANYO Semiconductor Co.,Ltd. products described or contained herein are controlled under any of applicable local export control laws and regulations, such products may require the export license from the authorities concerned in accordance with the above law.
- No part of this publication may be reproduced or transmitted in any form or by any means, electronic or mechanical, including photocopying and recording, or any information storage or retrieval system, or otherwise, without the prior written consent of SANYO Semiconductor Co.,Ltd.
- Any and all information described or contained herein are subject to change without notice due to product/technology improvement, etc. When designing equipment, refer to the "Delivery Specification" for the SANYO Semiconductor Co.,Ltd. product that you intend to use.
- Information (including circuit diagrams and circuit parameters) herein is for example only; it is not guaranteed for volume production.
- Upon using the technical information or products described herein, neither warranty nor license shall be granted with regard to intellectual property rights or any other rights of SANYO Semiconductor Co.,Ltd. or any third party. SANYO Semiconductor Co.,Ltd. shall not be liable for any claim or suits with regard to a third party's intellctual property rights which has resulted from the use of the technical information and products mentioned above.

This catalog provides information as of June, 2008. Specifications and information herein are subject to change without notice.