SOUND AMP

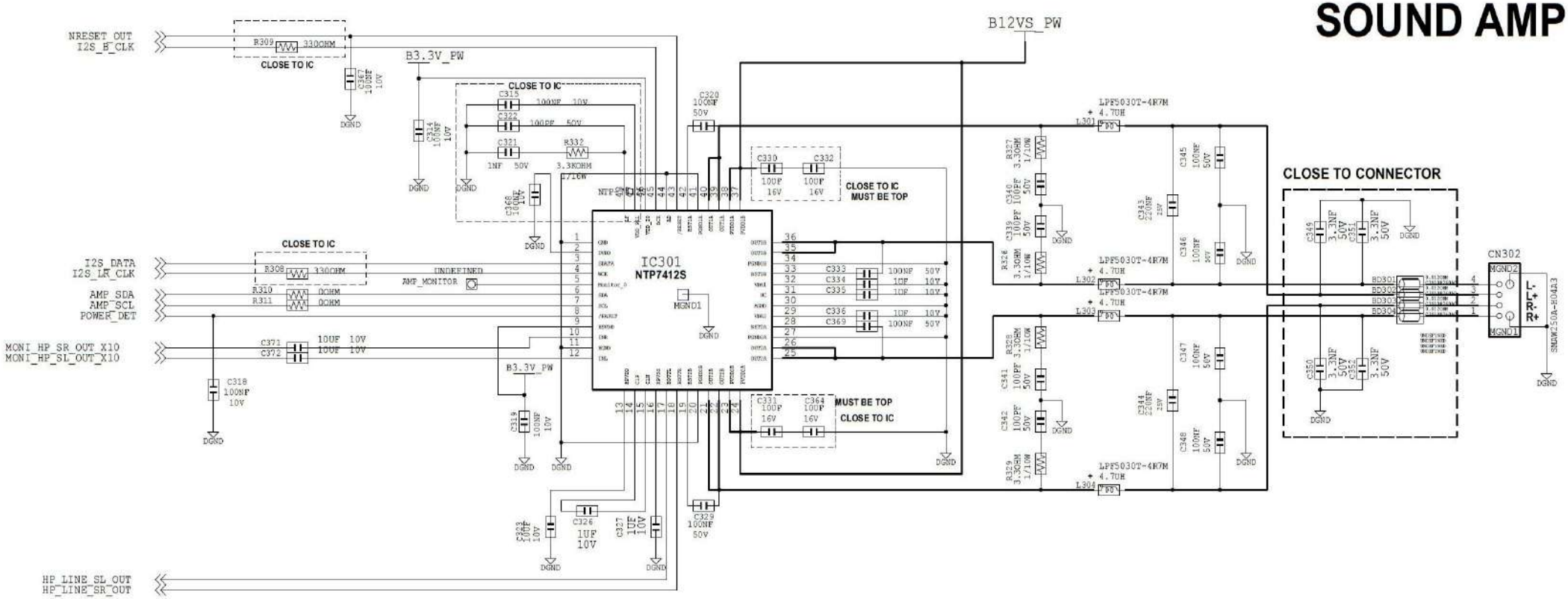
NRESET_OUT
I2S_B_CLK
R309 330OHM
CLOSE TO IC
C367 100NF 10V
DGND
B3.3V_PW
C314 100NF 10V
CLOSE TO IC
C315 100NF 10V
C322 100PF 50V
C321 1NF 50V
R332 3.3KOHM 1/16W
C368 100NF 10V
C320 100NF 50V
B12VS_PW
C330 100P 16V
C332 100P 16V
CLOSE TO IC
MUST BE TOP
NTP
IC301
NTP7412S
MGND1
I2S_DATA
I2S_LR_CLK
CLOSE TO IC
R308 330OHM
UNDEFINED
AMP_MONITOR
AMP_SDA
AMP_SCL
POWER_DET
R310 0OHM
R311 0OHM
C333 100NF 50V
C334 10UF 10V
C335 10UF 10V
C336 10UF 10V
C369 100NF 50V
MONI_HP_SR_OUT_X10
MONI_HP_SL_OUT_X10
C371 10UF 10V
C372 10UF 10V
C318 100NF 10V
B3.3V_PW
C319 100NF 10V
C331 100P 16V
C364 100P 16V
MUST BE TOP
CLOSE TO IC
C323 100PF 10V
C326 1UF 10V
C327 1UF 10V
C329 100NF 50V
HP_LINE_SL_OUT
HP_LINE_SR_OUT
LPFS030T-4R7M
4.7UH
L301
L302
L303
L304
R327 3.3OHM 1/10W
R326 3.3OHM 1/10W
R328 3.3OHM 1/10W
R329 3.3OHM 1/10W
C339 100PF 50V
C340 100PF 50V
C341 100PF 50V
C342 100PF 50V
C343 220NF 25V
C344 220NF 25V
C345 100NF 50V
C346 100NF 50V
C347 100NF 50V
C348 100NF 50V
CLOSE TO CONNECTOR
C349 3.3NF 50V
C351 3.3NF 50V
C350 3.3NF 50V
C352 3.3NF 50V
BD301
BD302
BD303
BD304
CN302
MGND2
MGND1
SMDWC250A-H04A13