DATA SHEET

PCF8584
I^{2}C-bus controller

Product specification
Supersedes data of 1997 Mar 19
File under Integrated Circuits, IC12

1997 Oct 21

Philips
Semiconductors

PHILIPS

CONTENTS

1 FEATURES
2 GENERAL DESCRIPTION
3 ORDERING INFORMATION
4 BLOCK DIAGRAM
5 PINNING
6 FUNCTIONAL DESCRIPTION
6.1 General
6.2 Interface Mode Control (IMC)
6.3 Set-up registers S0', S2 and S3
6.4 Own address register S0'
6.5 Clock register S2
6.6 Interrupt vector S3
6.7 Data shift register/read buffer S0
6.8 Control/status register S1
6.8.1 Register S1 control section
6.8.1.1 PIN (Pending Interrupt Not)
6.8.1.2 ESO (Enable Serial Output)
6.8.1.3 ES1 and ES2
6.8.1.4 ENI
6.8.1.5 STA and STO
6.8.1.6 ACK
6.8.2 Register S1 status section
6.8.2.1 PIN bit
6.8.2.2 STS
6.8.2.3 BER
6.8.2.4 LRB/AD0
6.8.2.5 AAS
6.8.2.6 LAB
6.8.2.7 $\overline{BB}$
6.9 Multi-master operation
6.10 Reset
6.11 Comparison to the MAB8400 I²C-bus interface
6.11.1 Deleted functions
6.11.2 added functions
6.12 Special function modes
6.12.1 Strobe
6.12.2 Long-distance mode
6.12.3 Monitor mode
7 SOFTWARE FLOWCHART EXAMPLES
7.1 Initialization
7.2 Implementation
8 I²C-BUS TIMING DIAGRAMS
9 LIMITING VALUES
10 HANDLING
11 DC CHARACTERISTICS
12 I²C-BUS TIMING SPECIFICATIONS
13 PARALLEL INTERFACE TIMING
14 APPLICATION INFORMATION
14.1 Application Notes
15 PACKAGE OUTLINES
16 SOLDERING
16.1 Introduction
16.2 DIP
16.2.1 Soldering by dipping or by wave
16.2.2 Repairing soldered joints
16.3 SO
16.3.1 Reflow soldering
16.3.2 Wave soldering
16.3.3 Repairing soldered joints
17 DEFINITIONS
18 LIFE SUPPORT APPLICATIONS
19 PURCHASE OF PHILIPS I²C COMPONENTS

1 FEATURES

- Parallel-bus to I²C-bus protocol converter and interface
- Compatible with most parallel-bus microcontrollers/microprocessors including 8049, 8051, 6800, 68000 and Z80
- Both master and slave functions
- Automatic detection and adaption to bus interface type
- Programmable interrupt vector
- Multi-master capability
- I²C-bus monitor mode
- Long-distance mode (4-wire)
- Operating supply voltage 4.5 to 5.5 V
- Operating temperature range: –40 to +85 °C.

2 GENERAL DESCRIPTION

The PCF8584 is an integrated circuit designed in CMOS technology which serves as an interface between most standard parallel-bus microcontrollers/microprocessors and the serial I²C-bus. The PCF8584 provides both master and slave functions.

Communication with the I²C-bus is carried out on a byte-wise basis using interrupt or polled handshake. It controls all the I²C-bus specific sequences, protocol, arbitration and timing. The PCF8584 allows parallel-bus systems to communicate bidirectionally with the I²C-bus.

3 ORDERING INFORMATION

TYPE NUMBER	PACKAGE		
	NAME	DESCRIPTION	VERSION
PCF8584P	DIP20	plastic dual in-line package; 20 leads (300 mil)	SOT146-1
PCF8584T	SO20	plastic small outline package; 20 leads; body width 7.5 mm	SOT163-1

4 BLOCK DIAGRAM

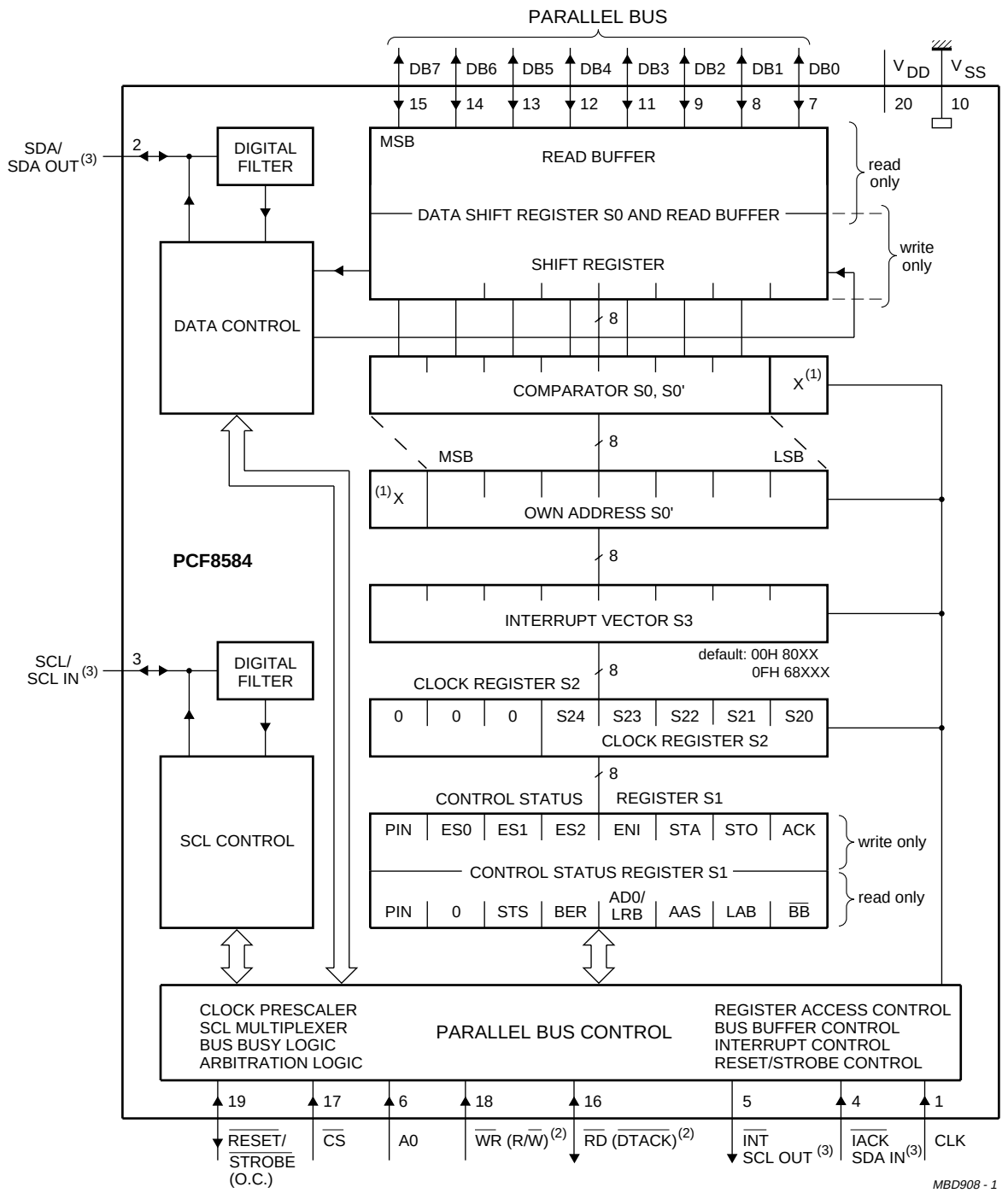

(1) X = don't care.

(2) Pin mnemonics between parenthesis indicate the 68000 mode pin designations.

(3) These pin mnemonics represent the long-distance mode pin designations.

Fig.1 Block diagram.

5 PINNING

SYMBOL	PIN	I/O	DESCRIPTION
CLK	1	I	clock input from microcontroller clock generator (internal pull-up)
SDA or SDA OUT	2	I/O	I^2C-bus serial data input/output (open-drain). Serial data output in long-distance mode.
SCL or SCL IN	3	I/O	I^2C-serial clock input/output (open-drain). Serial clock input in long-distance mode.
$\overline{IACK}$ or SDA IN	4	I	Interrupt acknowledge input (internal pull-up); when this signal is asserted the interrupt vector in register S3 will be available at the bus Port if the ENI flag is set. Serial data input in long-distance mode.
$\overline{INT}$ or SCL OUT	5	O	Interrupt output (open-drain); this signal is enabled by the ENI flag in register S1. It is asserted when the PIN flag is reset. (PIN is reset after 1 byte is transmitted or received over the I^2C-bus). Serial clock output in long-distance mode.
A0	6	I	Register select input (internal pull-up); this input selects between the control/status register and the other registers. Logic 1 selects register S1, logic 0 selects one of the other registers depending on bits loaded in ESO, ES1 and ES2 of register S1.
DB0	7	I/O	bidirectional 8-bit bus Port 0
DB1	8	I/O	bidirectional 8-bit bus Port 1
DB2	9	I/O	bidirectional 8-bit bus Port 2
V_{SS}	10	–	ground
DB3	11	I/O	bidirectional 8-bit bus Port 3
DB4	12	I/O	bidirectional 8-bit bus Port 4
DB5	13	I/O	bidirectional 8-bit bus Port 5
DB6	14	I/O	bidirectional 8-bit bus Port 6
DB7	15	I/O	bidirectional 8-bit bus Port 7
$\overline{RD}$ ($\overline{DTACK}$)	16	I/(O)	$\overline{RD}$ is the read control input for MAB8049, MAB8051 or Z80-types. $\overline{DTACK}$ is the data transfer control output for 68000-types (open-drain).
$\overline{CS}$	17	I	chip select input (internal pull-up)
$\overline{WR}$ (R/$\overline{W}$)	18	I	$\overline{WR}$ is the write control input for MAB8048, MAB8051, or Z80-types (internal pull-up). R/$\overline{W}$ control input for 68000-types.
$\overline{RESET}$/ $\overline{STROBE}$	19	I/O	Reset input (open-drain); this input forces the I^2C-bus controller into a predefined state; all flags are reset, except PIN, which is set. Also functions as strobe output.
V_{DD}	20	–	supply voltage

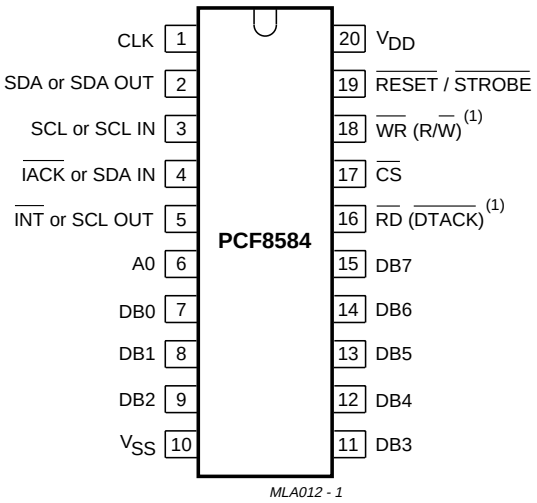

(1) Pin mnemonics between parenthesis indicate the 68000 mode pin designations.

Fig.2 Pin configuration.

6 FUNCTIONAL DESCRIPTION

6.1 General

The PCF8584 acts as an interface device between standard high-speed parallel buses and the serial I²C-bus. On the I²C-bus, it can act either as master or slave. Bidirectional data transfer between the I²C-bus and the parallel-bus microcontroller is carried out on a byte-wise basis, using either an interrupt or polled handshake. Interface to either 80XX-type (e.g. 8048, 8051, Z80) or 68000-type buses is possible. Selection of bus type is automatically performed (see Section 6.2).

Table 1 Control signals utilized by the PCF8584 for microcontroller/microprocessor interfacing

TYPE	R/$\overline{W}$	$\overline{WR}$	$\overline{R}$	$\overline{DTACK}$	$\overline{IACK}$
8048/ 8051	no	yes	yes	no	no
68000	yes	no	no	yes	yes
Z80	no	yes	yes	no	yes

The structure of the PCF8584 is similar to that of the I²C-bus interface section of the Philips' MABXXXX/PCF84(C)XX-series of microcontrollers, but with a modified control structure. The PCF8584 has five internal register locations. Three of these (own address register S0', clock register S2 and interrupt vector S3) are used for initialization of the PCF8584. Normally they are only written once directly after resetting of the PCF8584.

The remaining two registers function as double registers (data buffer/shift register S0, and control/status register S1) which are used during actual data transmission/reception. By using these double registers, which are separately write and read accessible, overhead for register access is reduced. Register S0 is a combination of a shift register and data buffer.

Register S0 performs all serial-to-parallel interfacing with the I²C-bus.

Register S1 contains I²C-bus status information required for bus access and/or monitoring.

6.2 Interface Mode Control (IMC)

Selection of either an 80XX mode or 68000 mode interface is achieved by detection of the first $\overline{WR}$-$\overline{CS}$ signal sequence. The concept takes advantage of the fact that the write control input is common for both types of interfaces. An 80XX-type interface is default. If a HIGH-to-LOW transition of $\overline{WR}$ (R/$\overline{W}$) is detected while $\overline{CS}$ is HIGH, the 68000-type interface mode is selected and the $\overline{DTACK}$ output is enabled. Care must be taken that $\overline{WR}$ and $\overline{CS}$ are stable after reset.

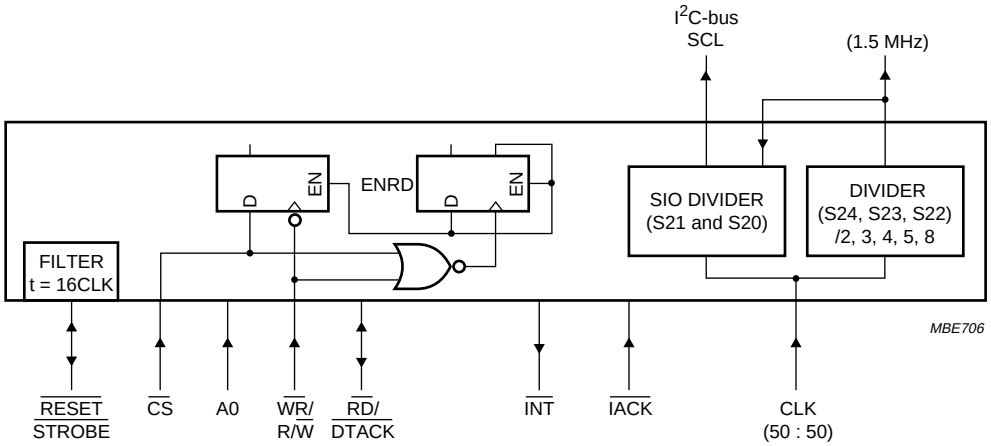

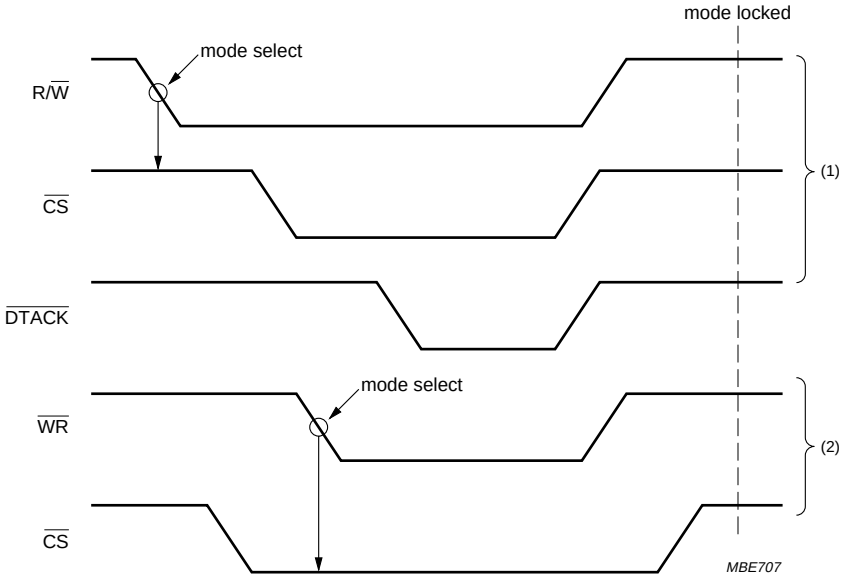

(1) Bus timing; 68000 mode write cycle.
(2) Bus timing; 80XX mode.

Fig.3 68000/80XX timing sequence utilized by the Interface Mode Control (IMC).

6.3 Set-up registers S0', S2 and S3

Registers S0', S2 and S3 are used for initialization of the PCF8584 (see Fig.5 ‘Initialization sequence’ flowchart).

6.4 Own address register S0'

When the PCF8584 is addressed as slave, this register must be loaded with the 7-bit I²C-bus address to which the PCF8584 is to respond. During initialization, the own address register S0' must be written to, regardless whether it is later used. The Addressed As Slave (AAS) bit in status register S1 is set when this address is received (the value in S0 is compared with the value in S0'). Note that the S0 and S0' registers are offset by one bit; hence, programming the own address register S0' with a value of 55H will result in the value AAH being recognized as the PCF8584’s slave address (see Fig.1).

Programming of S0' is accomplished via the parallel-bus when A0 is LOW, with the appropriate bit combinations set in control status register S1 (S1 is written when pin A0 = HIGH). Bit combinations for accessing all registers are given in Table 5. After reset, S0' has default address 00H (PCF8584 is thus initially in monitor mode, see Section 6.12.3).

6.5 Clock register S2

Register S2 provides control over chip clock frequency and SCL clock frequency. S20 and S21 provide a selection of 4 different I²C-bus SCL frequencies which are shown in Table 2. Note that these SCL frequencies are only obtained when bits S24, S23 and S22 are programmed to the correct input clock frequency (f_{clk}).

Table 2 Register S2 selection of SCL frequency

BIT		APPROXIMATE SCL FREQUENCY f_{SCL} (kHz)
S21	**S20**	
0	0	90
0	1	45
1	0	11
1	1	1.5

S22, S23 and S24 are used for control of the internal clock prescaler. Due to the possibility of varying microcontroller clock signals, the prescaler can be programmed to adapt to 5 different clock rates, thus providing a constant internal clock. This is required to provide a stable time base for the SCL generator and the digital filters associated with the I²C-bus signals SCL and SDA. Selection for adaption to external clock rates is shown in Table 3.

Programming of S2 is accomplished via the parallel-bus when A0 = LOW, with the appropriate bit combinations set in control status register S1 (S1 is written when A0 = HIGH). Bit combinations for accessing all registers are given in Table 5.

Table 3 Register S2 selection of clock frequency

INTERNAL CLOCK FREQUENCY			
S24	**S23**	**S22**	**f_{clk} (MHz)**
0	X(1)	X(1)	3
1	0	0	4.43
1	0	1	6
1	1	0	8
1	1	1	12

Note

1. X = don’t care.

6.6 Interrupt vector S3

The interrupt vector register provides an 8-bit user-programmable vector for vectored-interrupt microcontrollers. The vector is sent to the bus port (DB7 to DB0) when an interrupt acknowledge signal is asserted and the ENI (enable interrupt) flag is set. Default vector values are:

- Vector is ‘00H’ in 80XX mode
- Vector is ‘0FH’ in 68000 mode.

On reset the PCF8584 is in the 80XX mode, thus the default interrupt vector is ‘00H’.

6.7 Data shift register/read buffer S0

Register S0 acts as serial shift register and read buffer interfacing to the I²C-bus. All read and write operations to/from the I²C-bus are done via this register. S0 is a combination of a shift register and a data buffer; parallel data is always written to the shift register, and read from the data buffer. I²C-bus data is always shifted in or out of shift register S0.

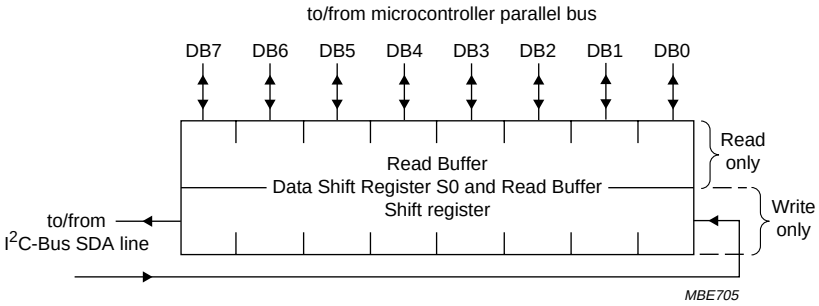

Fig.4 Data shift register/bus buffer S0.

In receiver mode the data from the shift register is copied to the read buffer during the acknowledge phase. Further reception of data is inhibited (SCL held LOW) until the S0 read buffer is read (see Section 6.8.1.1).

In the transmitter mode data is transmitted to the I²C-bus as soon as it is written to the S0 shift register if the serial I/O is enabled (ESO = 1).

Remarks:

1. A minimum of 6 clock cycles must elapse between consecutive parallel-bus accesses to the PCF8584 when the I²C-bus controller operates at 8 or 12 MHz. This may be reduced to 3 clock cycles for lower operating frequencies.
2. To start a read operation immediately after a write, it is necessary to read the S0 read buffer in order to invoke reception of the first byte (‘dummy read’ of the address). Immediately after the acknowledgement, this first byte will be transferred from the shift register to the read buffer. The **next** read will then transfer the correct value of the first byte to the microcontroller bus (see Fig.7).

6.8 Control/status register S1

Register S1 controls I²C-bus operation and provides I²C-bus status information. Register S1 is accessed by a HIGH signal on register select input A0. For more efficient communication between microcontroller/processor and the I²C-bus, register S1 has separate read and write functions for all bit positions (see Fig.3). The write-only section provides register access control and control over I²C-bus signals, while the read-only section provides I²C-bus status information.

Table 4 Control/status register S1

CONTROL/STATUS	BITS								MODE
Control(1)	PIN	ESO	ES1	ES2	ENI	STA	STO	ACK	write only
Status(2)	PIN	0(3)	STS	BER	AD0/LRB	AAS	LAB	$\overline{BB}$	read only

Notes

1. For further information see Section 6.8.1.
2. For further information see Section 6.8.2.
3. Logic 1 if not-initialized.

6.8.1 REGISTER S1 CONTROL SECTION

The write-only section of S1 enables access to registers S0, S0', S1, S2 and S3, and controls I²C-bus operation; see Table 4.

6.8.1.1 PIN (Pending Interrupt Not)

When the PIN bit is written with a logic 1, all status bits are reset to logic 0. This may serve as a software reset function (see Figs 5 to 9). PIN is the only bit in S1 which may be both read and written to. PIN is mostly used as a status bit for synchronizing serial communication, see Section 6.8.2.

6.8.1.2 ESO (Enable Serial Output)

ESO enables or disables the serial I²C-bus I/O. When ESO is LOW, register access for initialization is possible. When ESO is HIGH, I²C-bus communication is enabled; communication with serial shift register S0 is enabled and the S1 bus status bits are made available for reading.

Table 5 Register access control; ESO = 0 (serial interface off) and ESO = 1 (serial interface on)

INTERNAL REGISTER ADDRESSING 2-WIRE MODE				
A0	**ES1**	**ES2**	**$\overline{IACK}$**	**FUNCTION**
ESO = 0; serial interface off (see note 1)				
1	0	X	1[(2)]	R/W S1: control
0	0	0	1[(2)]	R/W S0': (own address)
0	0	1	1[(2)]	R/W S3: (interrupt vector)
0	1	0	1[(2)]	R/W S2: (clock register)
ESO = 1; serial interface on				
1	0	X	1	W S1: control
1	0	X	1	R S1; status
0	0	0	1	R/W S0: (data)
0	0	1	1	R/W S3: (interrupt vector)
X	0	X	0	R S3: (interrupt vector ACK cycle))

Notes

1. With ESO = 0, bits ENI, STA, STO and ACK of S1 can be read for test purposes.
2. ‘X’ if ENI = 0.

6.8.1.3 ES1 and ES2

ES1 and ES2 control selection of other registers for initialization and control of normal operation. After these bits are programmed for access to the desired register (shown in Table 5), the register is selected by a logic LOW level on register select pin A0.

6.8.1.4 ENI

This bit enables the external interrupt output $\overline{INT}$, which is generated when the PIN bit is active (logic 0).

This bit must be set to logic 0 before entering the long-distance mode, and remain at logic 0 during operation in long-distance mode.

6.8.1.5 STA and STO

These bits control the generation of the I²C-bus START condition and transmission of slave address and R/$\overline{W}$ bit, generation of repeated START condition, and generation of the STOP condition (see Table 7).

Table 6 Register access control; ESO = 1 (serial interface on) and ES1 = 1; long-distance (4-wire) mode; note 1

INTERNAL REGISTER ADDRESSING: LONG-DISTANCE (4-WIRE) MODE				
A0	**ES1**	**ES2**	**$\overline{IACK}$**	**FUNCTION**
1	1	X	1	W S1: control
1	1	X	X	R S1; status
0	1	X	X	R/W S0; (data)

Note

1. Trying to read from or write to registers other than S0 and S1 (setting ESO = 0) brings the PCF8584 out of the long-distance mode.

Table 7 Instruction table for serial bus control

STA	STO	PRESENT MODE	FUNCTION	OPERATION
1	0	SLV/REC	START	transmit START + address, remain MST/TRM if R/$\overline{W}$ = 0; go to MST/REC if R/$\overline{W}$ = 1
1	0	MST/TRM	REPEAT START	same as for SLV/REC
0	1	MST/REC; MST/TRM	STOP READ; STOP WRITE	transmit STOP go to SLV/REC mode; note 1
1	1	MST	DATA CHAINING	send STOP, START and address after last master frame without STOP sent; note 2
0	0	ANY	NOP	no operation; note 3

Notes

1. In master receiver mode, the last byte must be terminated with ACK bit HIGH (‘negative acknowledge’).
2. If both STA and STO are set HIGH simultaneously in master mode, a STOP condition followed by a START condition + address will be generated. This allows ‘chaining’ of transmissions without relinquishing bus control.
3. All other STA and STO mode combinations not mentioned in Table 7 are NOPs.

6.8.1.6 ACK

This bit must be set normally to a logic 1. This causes the I²C-bus controller to send an acknowledge automatically after each byte (this occurs during the 9th clock pulse). The bit must be reset (to logic 0) when the I²C-bus controller is operating in master/receiver mode and requires no further data to be sent from the slave transmitter. This causes a negative acknowledge on the I²C-bus, which halts further transmission from the slave device.

6.8.2 REGISTER S1 STATUS SECTION

The read-only section of S1 enables access to I²C-bus status information; see Table 4.

6.8.2.1 PIN bit

'Pending Interrupt Not' (MSB of register S1) is a status flag which is used to synchronize serial communication and is set to logic 0 whenever the PCF8584 requires servicing. The PIN bit is normally read in polled applications to determine when an I²C-bus byte transmission/reception is completed. The PIN bit may also be written, see Section 6.8.1.

Each time a serial data transmission is initiated (by setting the STA bit in the same register), the PIN bit will be set to logic 1 automatically (inactive). When acting as transmitter, PIN is also set to logic 1 (inactive) each time S0 is written. In receiver mode, the PIN bit is automatically set to logic 1 (inactive) each time the data register S0 is read.

After transmission or reception of one byte on the I²C-bus (9 clock pulses, including acknowledge), the PIN bit will be automatically reset to logic 0 (active) indicating a complete byte transmission/reception. When the PIN bit is subsequently set to logic 1 (inactive), all status bits will be reset to logic 0. PIN is also set to zero on a BER (bus error) condition.

In polled applications, the PIN bit is tested to determine when a serial transmission/reception has been completed. When the ENI bit (bit 4 of write-only section of register S1) is also set to logic 1 the hardware interrupt is enabled. In this case, the PIN flag also triggers an external interrupt (active LOW) via the $\overline{INT}$ output each time PIN is reset to logic 0 (active).

When acting as slave transmitter or slave receiver, while PIN = 0, the PCF8584 will suspend I²C-bus transmission by holding the SCL line LOW until the PIN bit is set to logic 1 (inactive). This prevents further data from being transmitted or received until the current data byte in S0 has been read (when acting as slave receiver) or the next data byte is written to S0 (when acting as slave transmitter).

PIN bit summary:

- The PIN bit can be used in polled applications to test when a serial transmission has been completed. When the ENI bit is also set, the PIN flag sets the external interrupt via the $\overline{INT}$ output.
- Setting the STA bit (start bit) will set PIN = 1 (inactive).
- In transmitter mode, after successful transmission of one byte on the I²C-bus the PIN bit will be automatically reset to logic 0 (active) indicating a complete byte transmission.
- In transmitter mode, PIN is set to logic 1 (inactive) each time register S0 is written.
- In receiver mode, PIN is set to logic 0 (active) on completion of each received byte. Subsequently, the SCL line will be held LOW until PIN is set to logic 1.
- In receiver mode, when register S0 is read, PIN is set to logic 1 (inactive).
- In slave receiver mode, an I²C-bus STOP condition will set PIN = 0 (active).
- PIN = 0 if a bus error (BER) occurs.

6.8.2.2 STS

When in slave receiver mode, this flag is asserted when an externally generated STOP condition is detected (used only in slave receiver mode).

6.8.2.3 BER

Bus error; a misplaced START or STOP condition has been detected. Resets $\overline{BB}$ (to logic 1; inactive), sets PIN = 0 (active).

6.8.2.4 LRB/AD0

'Last Received Bit' or 'Address 0 (General Call) bit'. This status bit serves a dual function, and is valid only while PIN = 0:

1. LRB holds the value of the last received bit over the I²C-bus while AAS = 0 (not addressed as slave). Normally this will be the value of the slave acknowledgement; thus checking for slave acknowledgement is done via testing of the LRB.
2. AD0; when AAS = 1 ('Addressed As Slave' condition), the I²C-bus controller has been addressed as a slave. Under this condition, this bit becomes the 'AD0' bit and will be set to logic 1 if the slave address received was the 'general call' (00H) address, or logic 0 if it was the I²C-bus controller's own slave address.

6.8.2.5 AAS

'Addressed As Slave' bit. Valid only when PIN = 0. When acting as slave receiver, this flag is set when an incoming address over the I²C-bus matches the value in own address register S0' (shifted by one bit, see Section 6.4), or if the I²C-bus 'General Call' address (00H) has been received ('General Call' is indicated when AD0 status bit is also set to logic 1, see Section 6.8.2.4).

6.8.2.6 LAB

'Lost Arbitration' Bit. This bit is set when, in multi-master operation, arbitration is lost to another master on the I²C-bus.

6.8.2.7 $\overline{BB}$

'Bus Busy' bit. This is a read-only flag indicating when the I²C-bus is in use. A zero indicates that the bus is busy, and access is not possible. This bit is set/reset (logic 1/logic 0) by STOP/START conditions.

6.9 Multi-master operation

To avoid conflict between data and repeated START and STOP operations, multi-master systems have some limitations:

- When powering up multiple PCF8584s in multi-master systems, the possibility exists that one node may power up slightly after another node has already begun an I²C-bus transmission; the Bus Busy condition will thus not have been detected. To avoid this condition, a delay should be introduced in the initialization sequence of each PCF8584 equal to the longest I²C-bus transmission, see flowchart 'PCF8584 initialization' (Fig.5).

6.10 Reset

A LOW level pulse on the $\overline{RESET}$ (CLK must run) input forces the I²C-bus controller into a well-defined state. All flags in S1 are reset to logic 0, except the PIN flag and the $\overline{BB}$ flag, which are set to logic 1. S0' and S3 are set to 00H.

The $\overline{RESET}$ pin is also used for the $\overline{STROBE}$ output signal. Both functions are separated on-chip by a digital filter. The reset input signal has to be sufficiently long (minimum 30 clock cycles) to pass through the filter. The $\overline{STROBE}$ output signal is sufficiently short (8 clock cycles) to be blocked by the filter. For more detailed information on the strobe function see Section 6.12.

6.11 Comparison to the MAB8400 I²C-bus interface

The structure of the PCF8584 is similar to that of the MAB8400 series of microcontrollers, but with a modified control structure. Access to all I²C-bus control and status registers is done via the parallel-bus port in conjunction with register select input A0, and control bits ESO, ES1 and ES2.

6.11.1 Deleted functions

The following functions are not available in the PCF8584:

- Always selected (ALS flag)
- Access to the bit counter (BC0 to BC2)
- Full SCL frequency selection (2 bits instead of 5 bits)
- The non-acknowledge mode (ACK flag)
- Asymmetrical clock (ASC flag).

6.11.2 Added functions

The following functions either replace the deleted functions or are completely new:

- Chip clock prescaler
- Assert acknowledge bit (ACK flag)
- Register selection bits (ES1 and ES2 flags)
- Additional status flags (BER, 'bus error')
- Automatic interface control between 80XX and 68000-type microcontrollers
- Programmable interrupt vector
- Strobe generator
- Bus monitor function
- Long-distance mode [non-I²C-bus mode (4-wire); only for communication between parallel-bus processors using the PCF8584 at each interface point].

6.12 Special function modes

6.12.1 Strobe

When the I²C-bus controller receives its own address (or the '00H' general call address) followed immediately by a STOP condition (i.e. no further data transmitted after the address), a strobe output signal is generated at the $\overline{RESET}$/$\overline{STROBE}$ pin (pin 19). The $\overline{STROBE}$ signal consists of a monostable output pulse (active LOW), 8 clock cycles long (see Fig.9). It is generated after the STOP condition is received, preceded by the correct slave address. This output can be used as a bus access controller for multi-master parallel-bus systems.

6.12.2 LONG-DISTANCE MODE

The long-distance mode provides the possibility of longer-distance serial communication between parallel processors via two I²C-bus controllers. This mode is selected by setting ES1 to logic 1 while the serial interface is enabled (ESO = 1).

In this mode the I²C-bus protocol is transmitted over 4 unidirectional lines, SDA OUT, SCL IN, SDA IN and SCL IN (pins 2, 3, 4 and 5). These communication lines should be connected to line drivers/receivers (example: RS422) for long-distance applications. Hardware characteristics for long-distance transmission are then given by the chosen standard. Control of data transmission is the same as in normal I²C-bus mode. After reading or writing data to shift register S0, long-distance mode must be initialized by setting ESO and ES1 to logic 1. Because the interrupt output $\overline{INT}$ is not available in this operating mode, synchronization of data transmission/reception must be polled via the PIN bit.

Remarks:

Before entering the long-distance mode, ENI must be set to logic 0.

When powering up an PCF8584-node in long-distance mode, the PCF8584 must be isolated from the 4-wire bus via 3-state line drivers/receivers until the PCF8584 is properly initialized for long-distance mode. Failure to implement this precaution will result in system malfunction.

6.12.3 MONITOR MODE

When the 7-bit own address register S0' is loaded with all zeros, the I²C-bus controller acts as a passive I²C monitor. The main features of the monitor mode are:

- The controller is always selected.
- The controller is always in the slave receiver mode.
- The controller never generates an acknowledge.
- The controller never generates an interrupt request.
- A pending interrupt condition does not force SCL LOW.
- $\overline{BB}$ is set to logic 0 after detection of a START condition, and reset to logic 1 after a STOP condition.
- Received data is automatically transferred to the read buffer.
- Bus traffic is monitored by the PIN bit, which is reset to logic 0 after the acknowledge bit of an incoming byte has been received, and is set to logic 1 as soon as the first bit of the next incoming byte is detected. Reading the data buffer S0 sets the PIN bit to logic 1. Data in the read buffer is valid from PIN = 0 and during the next 8 clock pulses (until next acknowledge).
- AAS is set to logic 1 at every START condition, and reset at every 9th clock pulse.

7 SOFTWARE FLOWCHART EXAMPLES

7.1 Initialization

The flowchart of Fig.5 gives an example of a proper initialization sequence of the PCF8584.

7.2 Implementation

The flowcharts (Figs 6 to 9) illustrate proper programming sequences for implementing master transmitter, master receive, and master transmitter, repeated start and master receiver modes in polled applications.

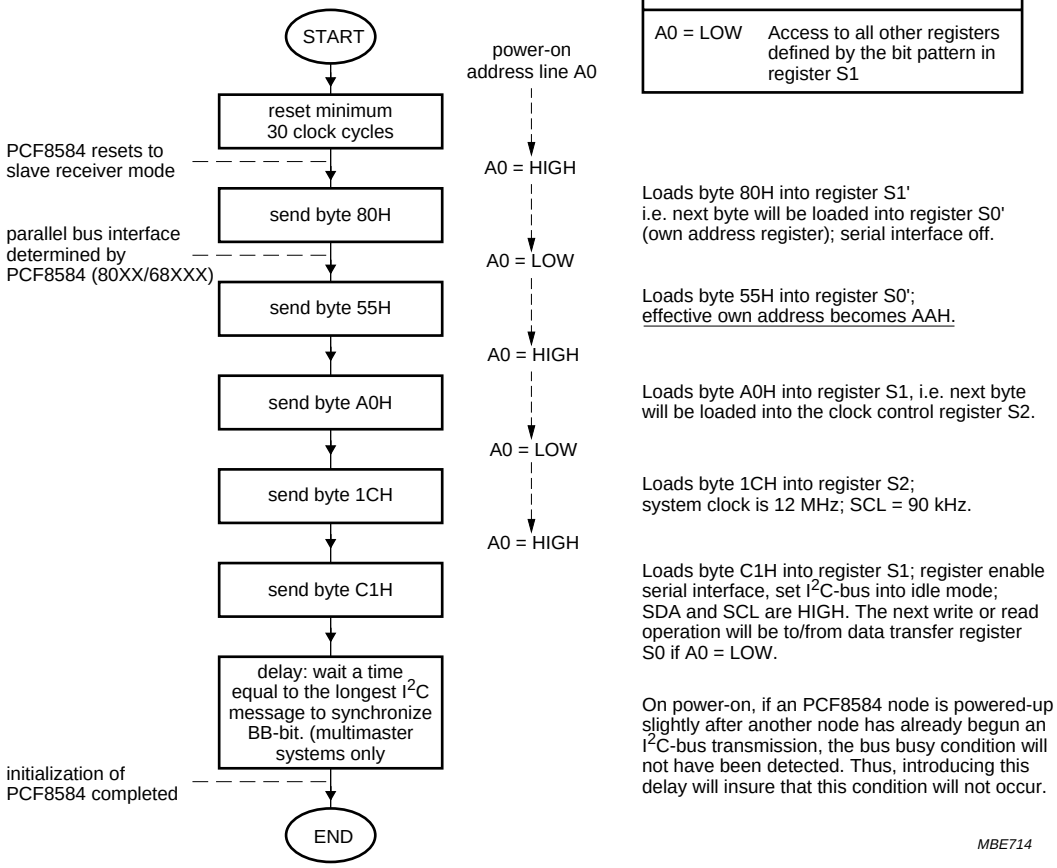

Fig.5 PCF8584 initialization sequence.

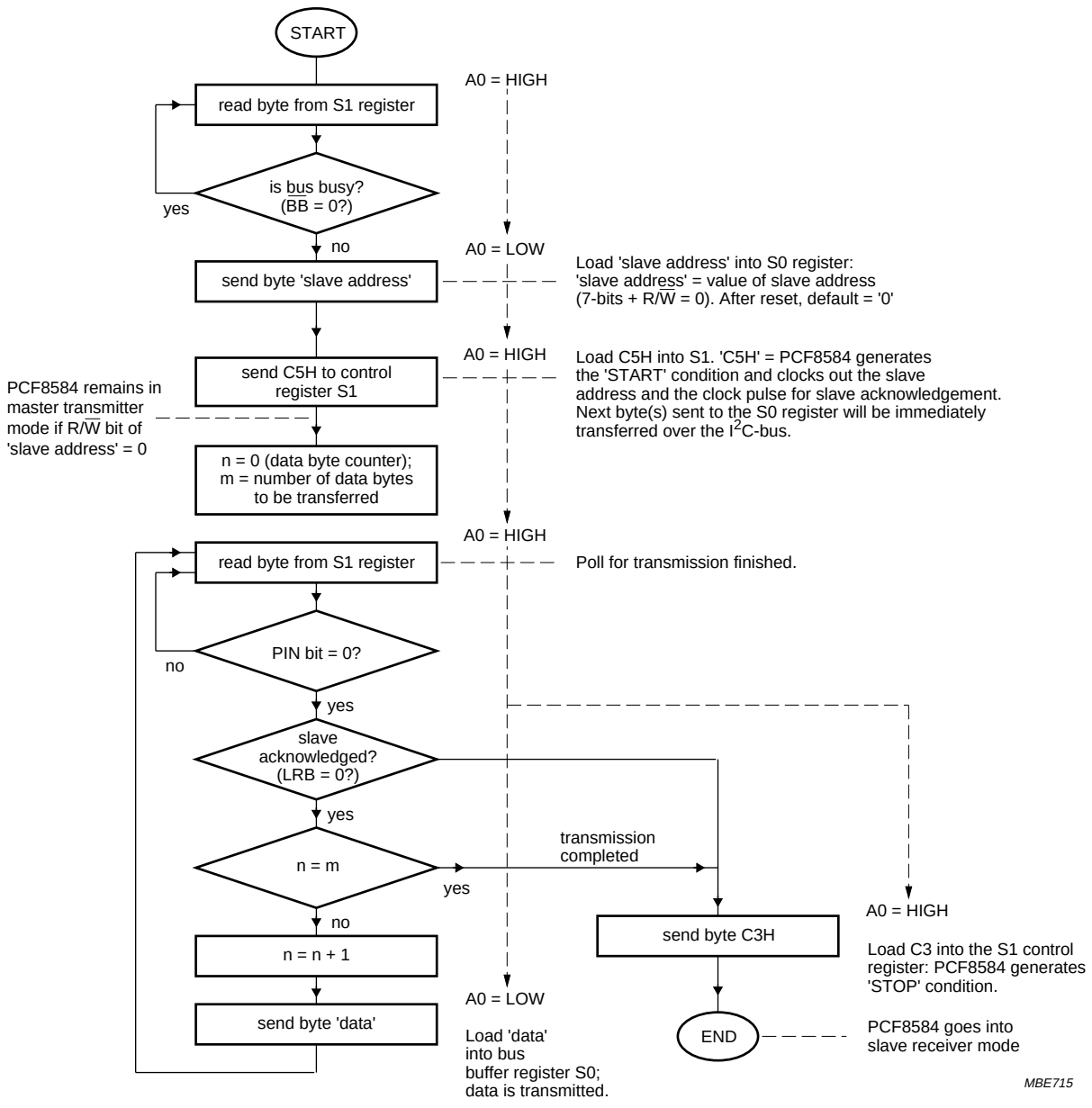

Fig.6 PCF8584 master transmitter mode.

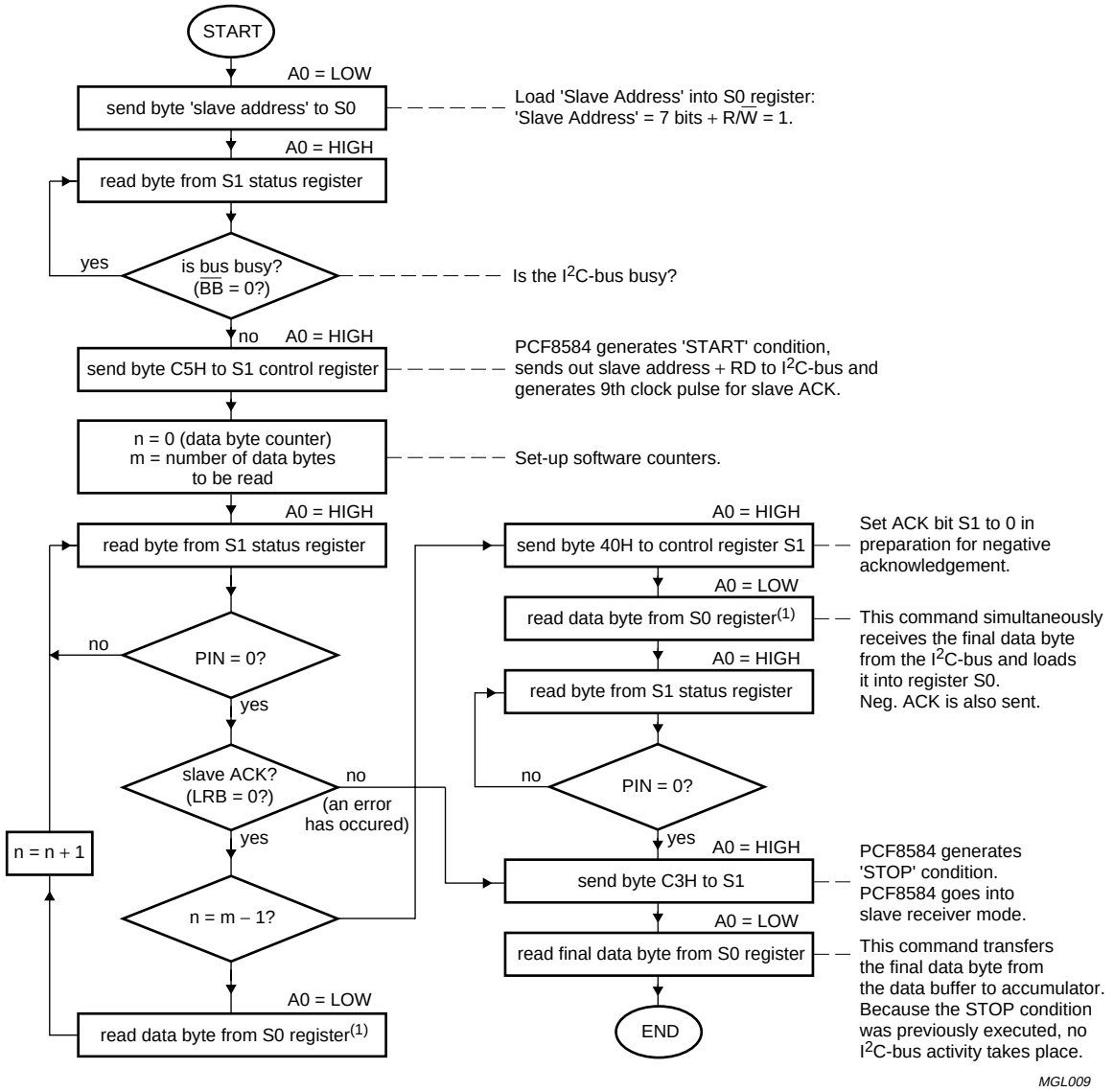

(1) The first read of the S0 register is a 'dummy read' of the slave address which should be discarded. The first read of the S0 register simultaneously reads the current value of S0 and then transfers the first valid data byte from the I²C-bus to S0.

Fig.7 PCF8584 master receiver mode.

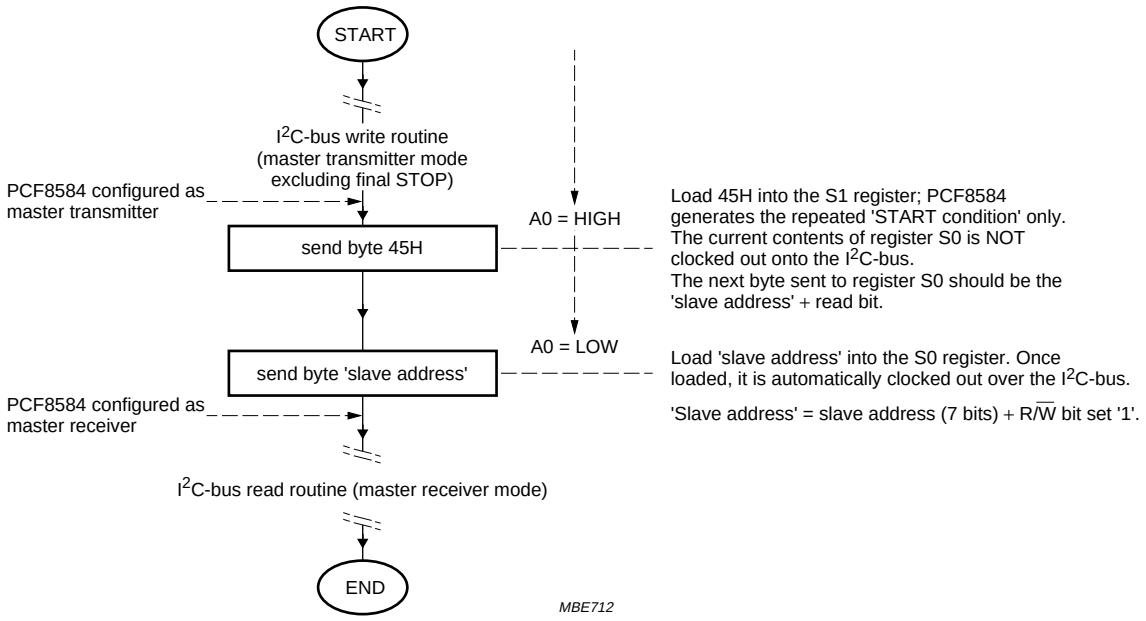

Fig.8 Master transmitter followed by repeated START and becoming master receiver.

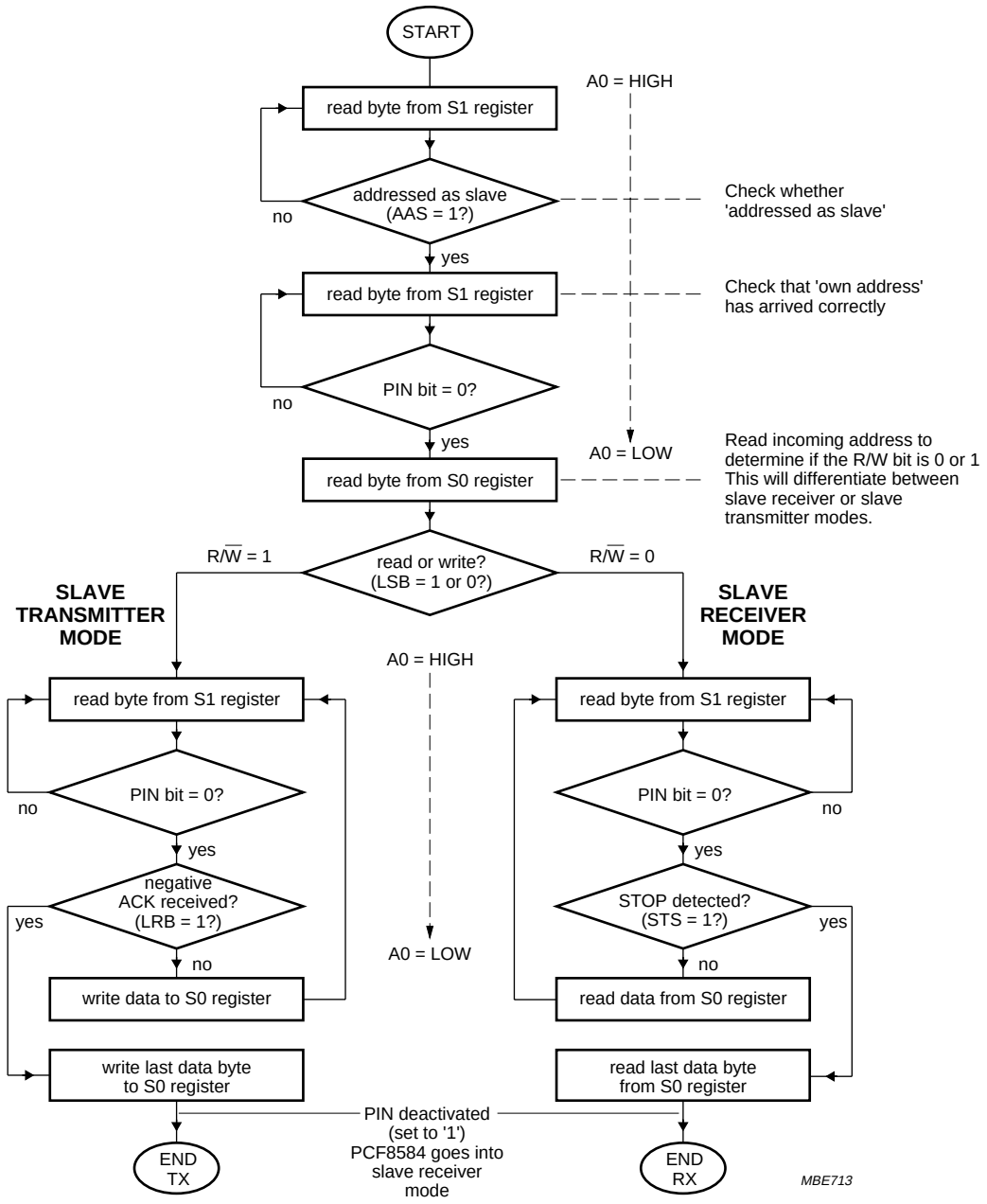

Fig.9 Slave receiver/slave transmitter modes.

8 I²C-BUS TIMING DIAGRAMS

The diagrams (Figs 10 to 13) illustrate typical timing diagrams for the PCF8584 in master/slave functions. For detailed description of the I²C-bus protocol, please refer to *"The I²C-bus and how to use it"*; Philips document ordering number 9398 393 40011.

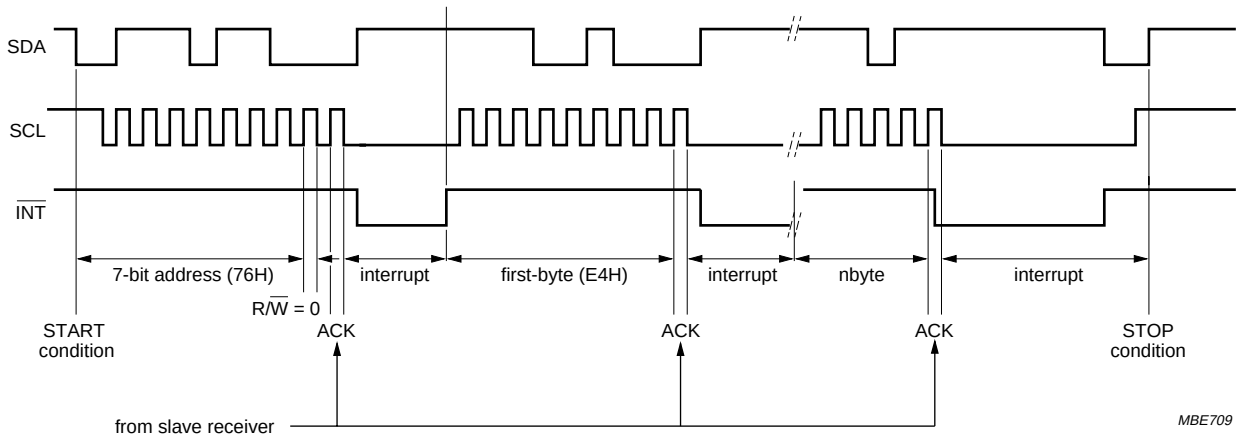

Master PCF8584 writes data to slave transmitter.

Fig.10 Bus timing diagram; master transmitter mode.

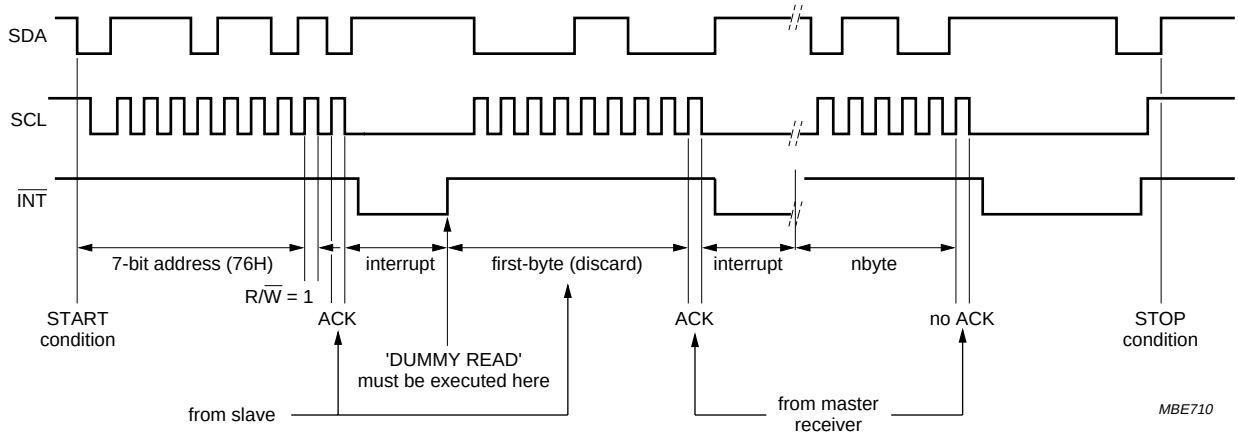

Master PCF8584 reads data from slave transmitter.

Fig.11 Bus timing diagram; master receiver mode.

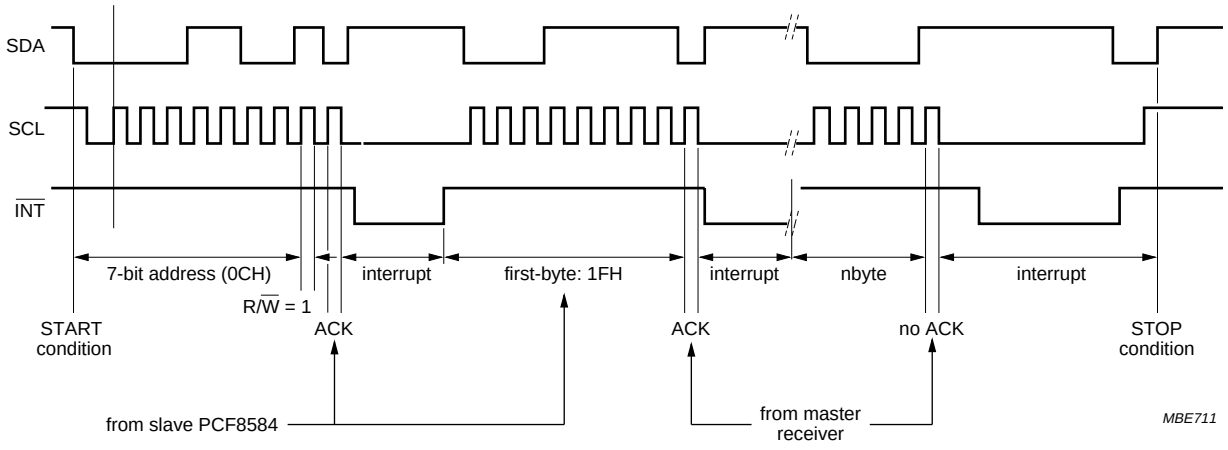

External master receiver reads data from PCF8584.

Fig.12 Bus timing diagram; slave transmitter mode.

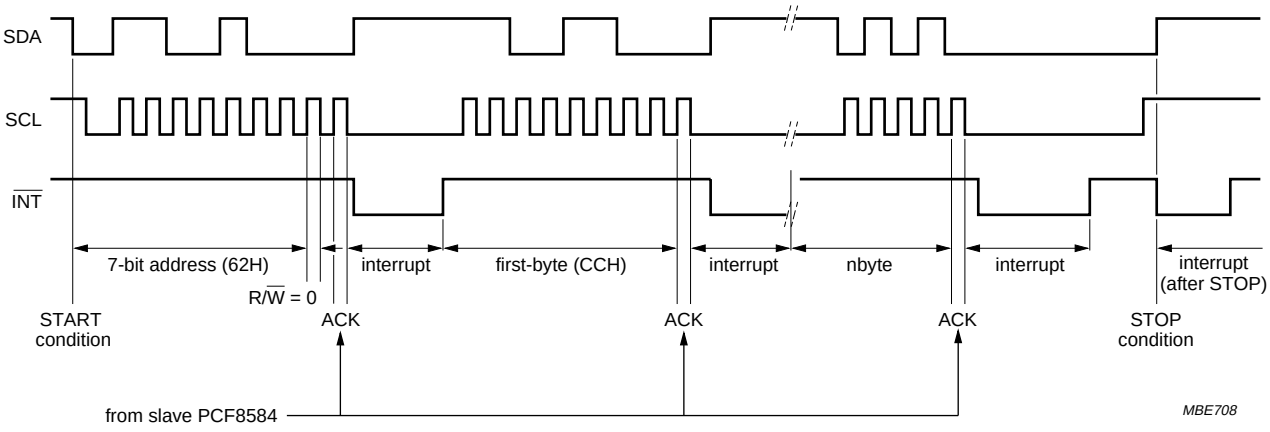

Slave PCF8584 is written to by external master transmitter.

Fig.13 Bus timing diagram; slave receiver mode.

9 LIMITING VALUES

In accordance with the Absolute Maximum Rating System (IEC 134).

SYMBOL	PARAMETER	MIN.	MAX.	UNIT
V_{DD}	supply voltage	–0.3	+7.0	V
V_I	voltage range (any input)	–0.8	V_{DD} + 0.5	V
I_I	DC input current (any input)	–10	+10	mA
I_O	DC output current (any output)	–10	+10	mA
P_{tot}	total power dissipation	–	300	mW
P_O	power dissipation per output	–	50	mW
T_{amb}	operating ambient temperature	–40	+85	°C
T_{stg}	storage temperature	–65	+150	°C

10 HANDLING

Inputs and outputs are protected against electrostatic discharge in normal handling. However, to be totally safe, it is good practice to take normal precautions appropriate to handling MOS devices (see *“Handling MOS Devices”*).

11 DC CHARACTERISTICS

V_{DD} = 5 V ±10%; T_{amb} = –40 to +85 °C; unless otherwise specified.

SYMBOL	PARAMETER	CONDITIONS	MIN.	TYP.	MAX.	UNIT
Supply						
V_{DD}	supply voltage		4.5	5.0	5.5	V
I_{DD}	supply current	standby; note 1	–	–	2.5	µA
		operating; notes 1 and 2	–	–	1.5	mA
Inputs						
CLK, $\overline{IACK}$, A0, $\overline{CS}$, $\overline{WR}$, $\overline{RD}$, $\overline{RESET}$ AND D0 to D7						
V_{IL}	LOW level input voltage	note 3	0	–	0.8	V
V_{IH}	HIGH level input voltage	note 3	2.0	–	V_{DD}	V
SDA AND SCL						
V_{IL}	LOW level input voltage	note 4	0	–	$0.3V_{DD}$	V
V_{IH}	HIGH level input voltage	note 4	$0.7V_{DD}$	–	V_{DD}	V
R_i	resistance to V_{DD}	T_{amb} = 25 °C; note 5	25	–	100	kΩ
Outputs						
I_{OH}	HIGH level output current	V_{OH} = 2.4 V; note 6 and 7	–2.4	–	–	mA
I_{OL}	LOW level output current	V_{OL} = 0.4 V; note 6	3.0	–	–	mA
I_{OL}	leakage current	note 8	–1	–	+1	µA

Notes

1. Test conditions: 22 kΩ pull-up resistors on D0 to D7; 10 kΩ pull-up resistors on SDA, SCL, $\overline{RD}$; $\overline{RESET}$ connected to V_{SS}; remaining pins open-circuit.
2. CLK waveform of 12 MHz with 50% duty factor.
3. CLK, $\overline{IACK}$, A0, $\overline{CS}$, $\overline{WR}$, $\overline{RD}$, $\overline{RESET}$ and D0 to D7 are TTL level inputs.
4. SDA and SCL are CMOS level inputs.
5. CLK, $\overline{IACK}$, A0, $\overline{CS}$ and $\overline{WR}$.
6. D0 to D7.
7. $\overline{DTACK}$, $\overline{STROBE}$.
8. D0 to D7 3-state, SDA, SCL, $\overline{INT}$, $\overline{RD}$, $\overline{RESET}$.

12 I²C-BUS TIMING SPECIFICATIONS

All the timing limits are valid within the operating supply voltage and ambient temperature range; V_{DD} = 5 V ±10%; T_{amb} = −40 to +85 °C; and refer to V_{IL} and V_{IH} with an input voltage of V_{SS} to V_{DD}.

SYMBOL	PARAMETER	MIN.	TYP.	MAX.	UNIT
f_{SCL}	SCL clock frequency	–	–	100	kHz
t_{SW}	tolerable spike width on bus	–	–	100	ns
t_{BUF}	bus free time	4.7	–	–	µs
$t_{SU;STA}$	START condition set-up time	4.7	–	–	µs
$t_{HD;STA}$	START condition hold time	4.0	–	–	µs
t_{LOW}	SCL LOW time	4.7	–	–	µs
t_{HIGH}	SCL HIGH time	4.0	–	–	µs
t_r	SCL and SDA rise time	–	–	1.0	µs
t_f	SCL and SDA fall time	–	–	0.3	µs
$t_{SU;DAT}$	data set-up time	250	–	–	ns
$t_{HD;DAT}$	data hold time	0	–	–	ns
$t_{VD;DAT}$	SCL LOW to data out valid	–	–	3.4	µs
$t_{SU;STO}$	STOP condition set-up time	4.0	–	–	µs

13 PARALLEL INTERFACE TIMING

All the timing limits are valid within the operating supply voltage and ambient temperature range: V_{DD} = 5 V ±10%; T_{amb} = −40 to +85 °C; and refer to V_{IL} and V_{IH} with an input voltage of V_{SS} to V_{DD}. C_L = 100 pF; R_L = 1.5 kΩ (connected to V_{DD}) for open-drain and high-impedance outputs, where applicable (for measurement purposes only).

SYMBOL	PARAMETER	CONDITIONS	MIN.	TYP.	MAX.	UNIT
t_r	clock rise time	see Fig.14	–	–	6	ns
t_f	clock fall time	see Fig.14	–	–	6	ns
t_{CLK}	input clock period (50% ±5% duty factor)	see Fig.14	83	–	333	ns
t_{CLRL}	$\overline{CS}$ set-up to $\overline{RD}$ LOW	see Fig.16 and note 1	20	–	–	ns
t_{CLWL}	$\overline{CS}$ set-up to $\overline{WR}$ LOW	see Fig.15 and note 1	20	–	–	ns
t_{RHCH}	$\overline{CS}$ hold from $\overline{RD}$ HIGH	see Fig.16	0	–	–	ns
t_{WHCH}	$\overline{CS}$ hold from $\overline{WR}$ HIGH	see Fig.15	0	–	–	ns
t_{AVWL}	A0 set-up to $\overline{WR}$ LOW	see Fig.15	10	–	–	ns
t_{AVRL}	A0 set-up to $\overline{RD}$ LOW	see Fig.16	10	–	–	ns
t_{WHAI}	A0 hold from $\overline{WR}$ HIGH	see Fig.15	20	–	–	ns
t_{RHAI}	A0 hold from $\overline{RD}$ HIGH	see Fig.16	10	–	–	ns
t_{WLWH}	$\overline{WR}$ pulse width	see Fig.15	230	–	1000	ns
t_{RLRH}	$\overline{RD}$ pulse width	see Fig.16	230	–	1000	ns
t_{DVWH}	data set-up before $\overline{WR}$ HIGH	see Fig.15	150	–	–	ns
t_{RLDV}	data valid after $\overline{RD}$ LOW	see Fig.16	–	160	180	ns
t_{WHDI}	data hold after $\overline{WR}$ HIGH	see Fig.15	20	–	–	ns
t_{RHDF}	data bus floating after $\overline{RD}$ HIGH	see Fig.16	–	–	150	ns

SYMBOL	PARAMETER	CONDITIONS	MIN.	TYP.	MAX.	UNIT
t_{AVCL}	A0 set-up to $\overline{CS}$ LOW	see Figs 17 and 18	10	–	–	ns
t_{WLCL}	R/$\overline{WR}$ set-up to $\overline{CS}$ LOW	see Fig.17	10	–	–	ns
t_{RHCL}	$\overline{R}$/WR set-up to $\overline{CS}$ LOW	see Fig.18	10	–	–	ns
t_{CLDV}	data valid after $\overline{CS}$ LOW	see Fig.18 and note 2	–	160	180	ns
t_{CLDL}	$\overline{DTACK}$ LOW after $\overline{CS}$ LOW	see Figs 17 and 18	–	$2t_{CLK}$ + 75	$3t_{CLK}$ + 150	ns
t_{CHAI}	A0 hold from $\overline{CS}$ HIGH	see Fig.18	0	–	–	ns
t_{CHRL}	R/$\overline{WR}$ hold from $\overline{CS}$ HIGH	see Fig.18	0	–	–	ns
t_{CHWH}	$\overline{R}$/WR hold from $\overline{CS}$ HIGH	see Fig.17	0	–	–	ns
t_{CHDF}	data bus float after $\overline{CS}$ HIGH	see Fig.18	–	–	150	ns
t_{CHDE}	$\overline{DTACK}$ HIGH from $\overline{CS}$ HIGH	see Figs 17 and 18	–	100	120	ns
t_{CHDI}	data hold after $\overline{CS}$ HIGH	see Fig.17	0	–	–	ns
t_{DVCL}	data set-up to $\overline{CS}$ LOW	see Fig.17	0	–	–	ns
t_{ALIE}	$\overline{INT}$ HIGH from $\overline{IACK}$ LOW	see Figs 19 and 20	–	130	180	ns
t_{ALDV}	data valid after $\overline{IACK}$ LOW	see Figs 19 and 20	–	200	250	ns
t_{ALAE}	$\overline{IACK}$ pulse width	see Fig.20	230	–	–	ns
t_{AHDI}	data hold after $\overline{IACK}$ HIGH	see Fig.20	–	–	30	ns
t_{ALDL}	$\overline{DTACK}$ LOW from $\overline{IACK}$ LOW	see Fig.20	–	$2t_{CLK}$ + 75	$3t_{CLK}$ + 150	ns
t_{AHDE}	$\overline{DTACK}$ HIGH from $\overline{IACK}$ HIGH	see Fig.20	–	120	140	ns
t_{W4}	$\overline{RESET}$ pulse width	see Fig.21	$30t_{CLK}$	–	–	ns
t_{W5}	$\overline{STROBE}$ pulse width	see Fig.22	$8t_{CLK}$	$8t_{CLK}$ + 90	–	ns
t_{CLCL}	$\overline{CS}$ LOW	see Figs 17 and 18	–	t_{CLDL} + t_{CHDE}	–	ns

Notes

1. A minimum of 6 clock cycles must elapse between consecutive parallel-bus accesses when the I²C-bus controller operates at 8 or 12 MHz. This may be reduced to 3 clock cycles for lower operating frequencies.
2. Not for S1.

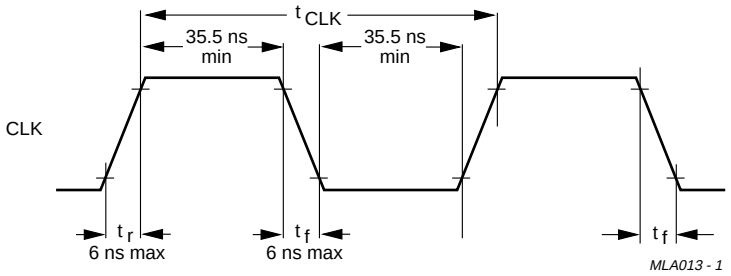

Fig.14 Clock input timing.

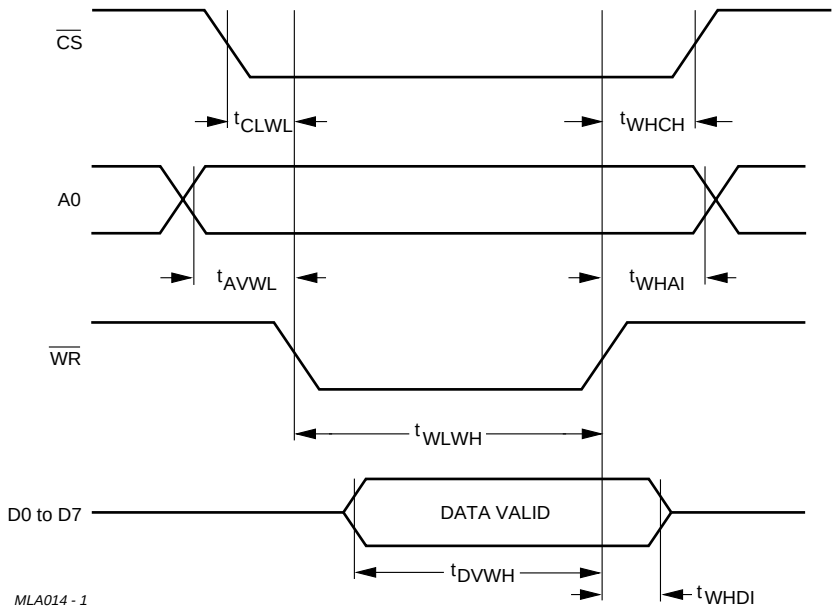

Fig.15 Bus timing (80XX mode); write cycle.

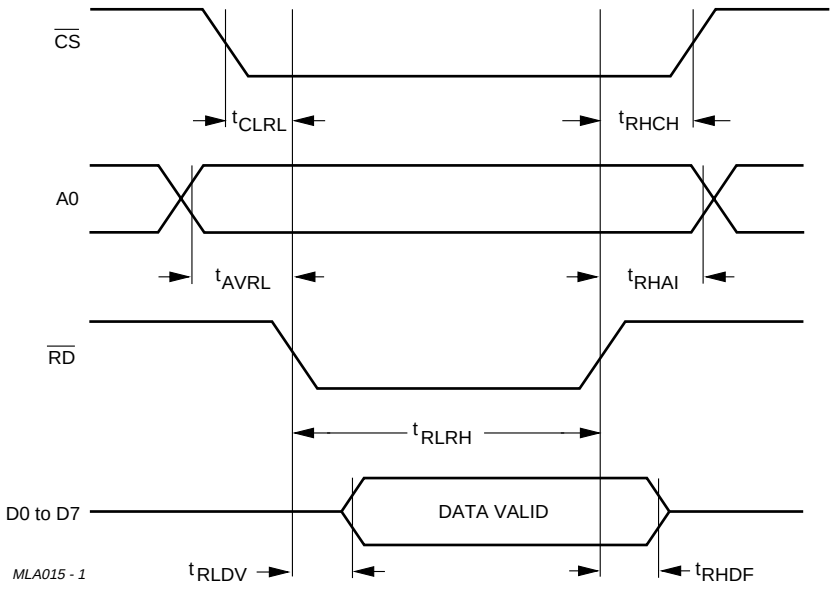

Fig.16 Bus timing (80XX mode); read cycle.

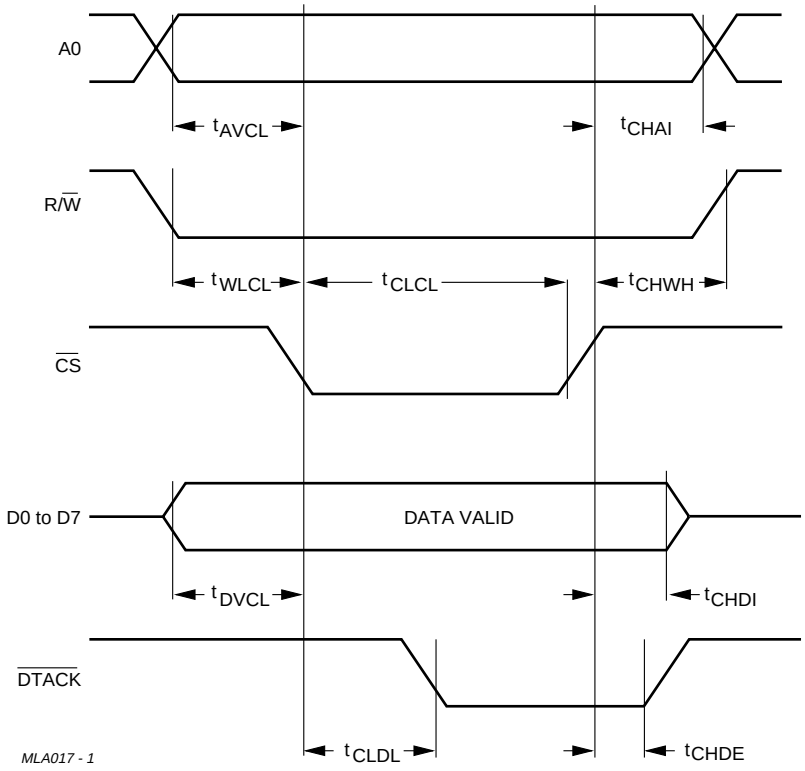

Fig.17 Bus timing (68000 mode); write cycle.

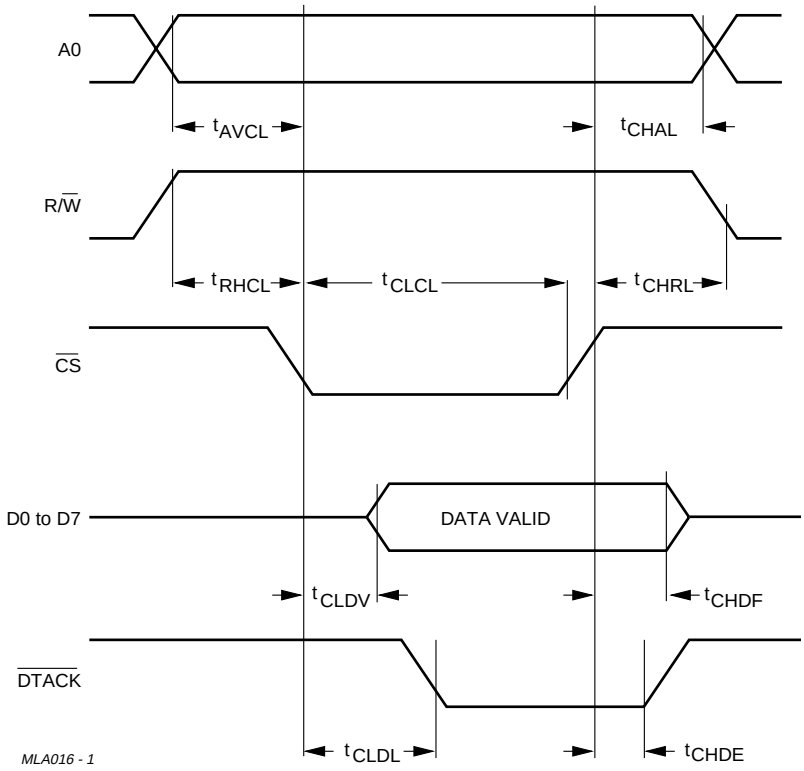

Fig.18 Bus timing (68000 mode); read cycle.

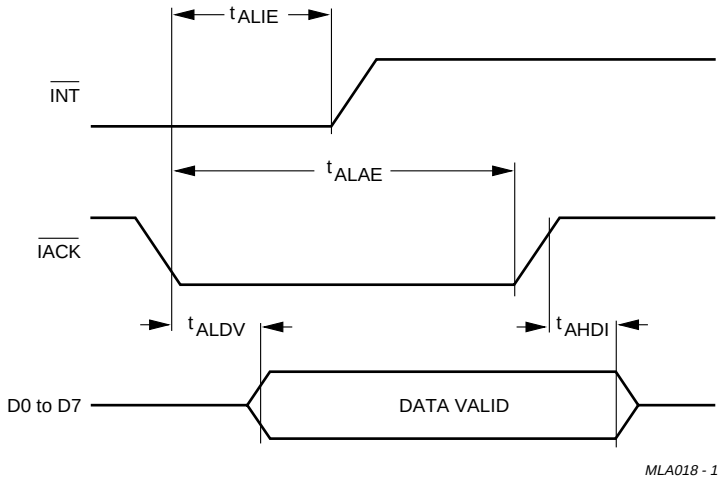

Fig.19 Interrupt timing (80XX mode).

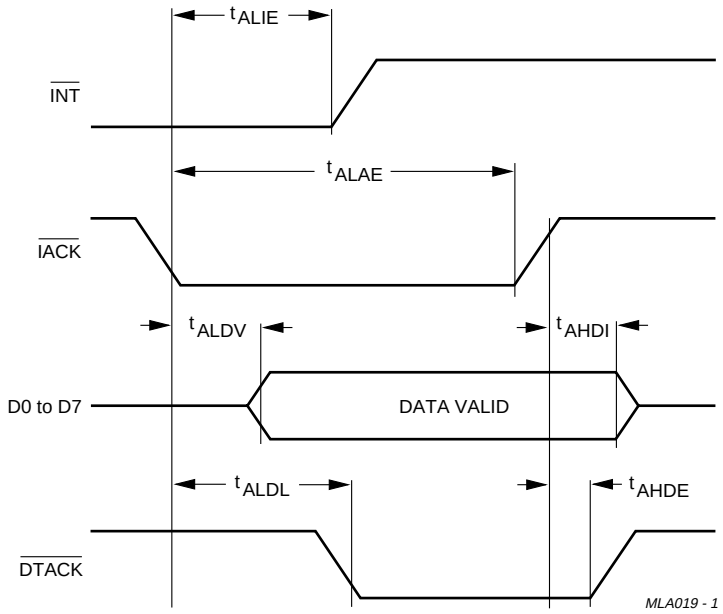

Fig.20 Interrupt timing (68000 mode).

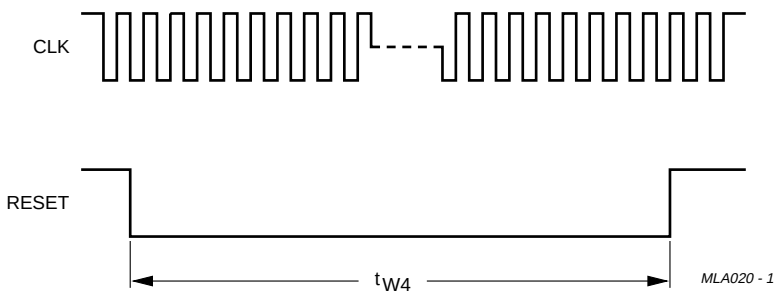

Fig.21 Reset timing.

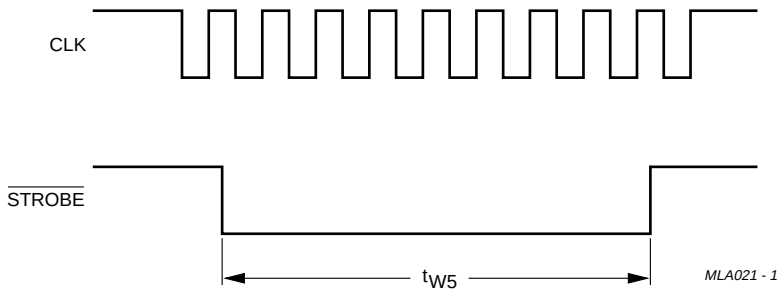

Fig.22 Strobe timing.

14 APPLICATION INFORMATION

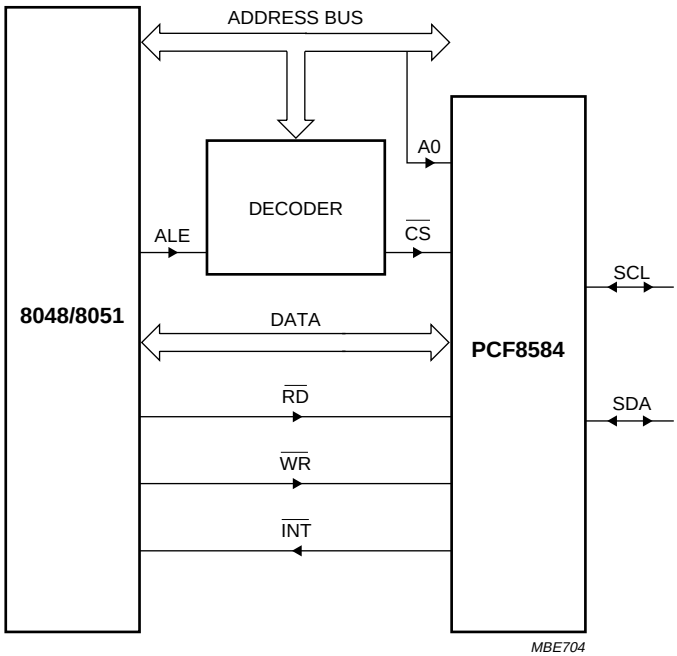

Fig.23 Application diagram using the 8048/8051.

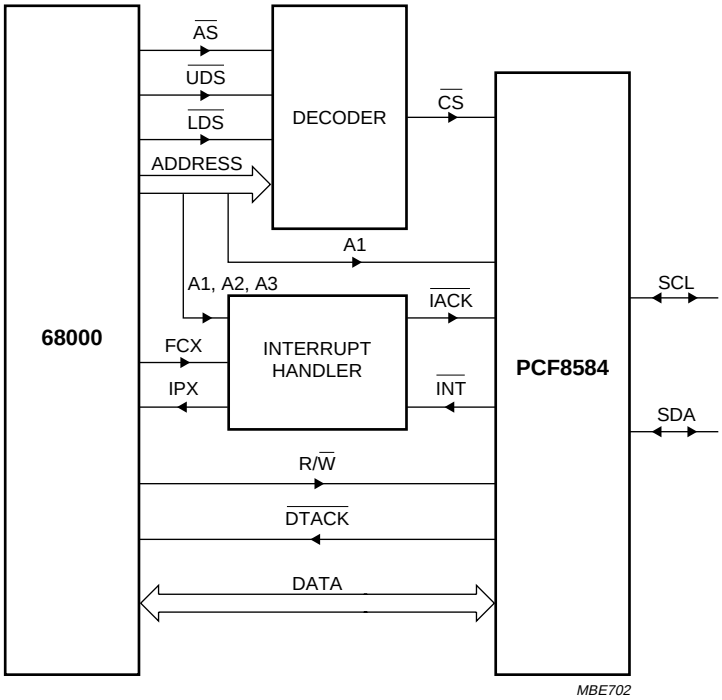

Fig.24 Application diagram using the 68000.

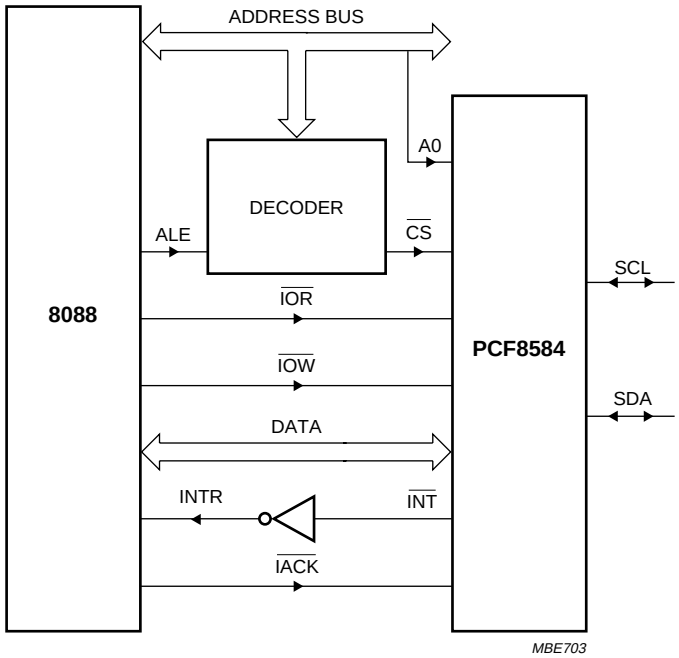

Fig.25 Application diagram using the 8088.

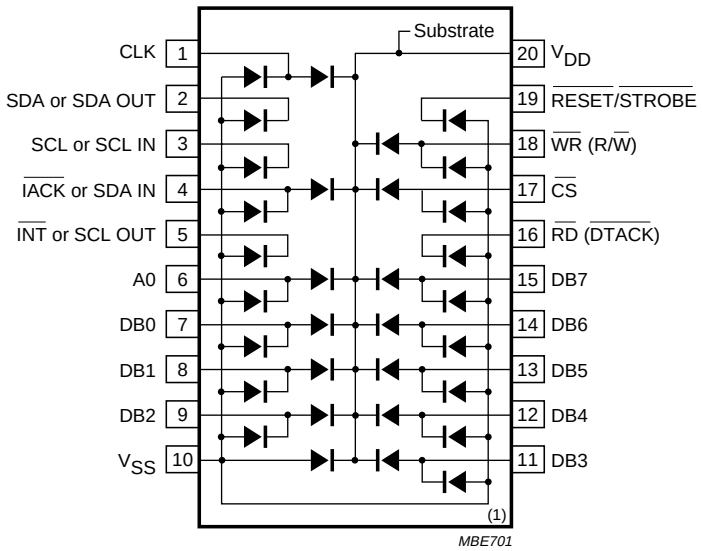

Maximum forward current: 5 mA; maximum reverse voltage: 5 V.

Fig.26 PCF8584 diode protection.

14.1 Application notes

Additional application notes are available from Philips Semiconductors:

1. AN95068: *"C Routines for the PCF8584".*
2. AN96040: *"Using the PCF8584 with non-specified timings and other frequently asked questions"*.
3. AN90001: *"Interfacing PCF8584 I²C-bus controller to 80(C)51 family of microcontrollers"*.

15 PACKAGE OUTLINES

DIP20: plastic dual in-line package; 20 leads (300 mil) **SOT146-1**

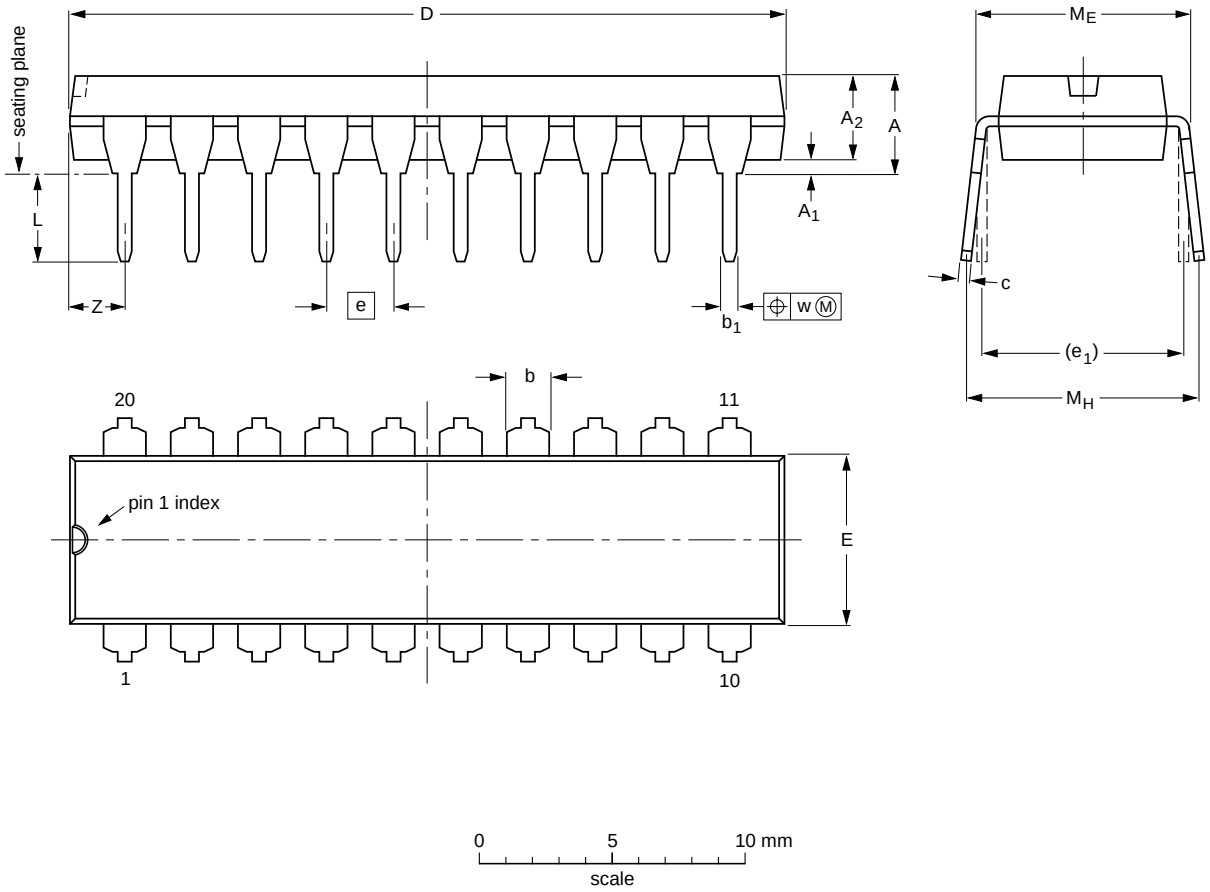

DIMENSIONS (inch dimensions are derived from the original mm dimensions)

UNIT	A max.	A_1 min.	A_2 max.	b	b_1	c	D (1)	E (1)	e	e_1	L	M_E	M_H	w	Z (1) max.
mm	4.2	0.51	3.2	1.73 1.30	0.53 0.38	0.36 0.23	26.92 26.54	6.40 6.22	2.54	7.62	3.60 3.05	8.25 7.80	10.0 8.3	0.254	2.0
inches	0.17	0.020	0.13	0.068 0.051	0.021 0.015	0.014 0.009	1.060 1.045	0.25 0.24	0.10	0.30	0.14 0.12	0.32 0.31	0.39 0.33	0.01	0.078

Note

1. Plastic or metal protrusions of 0.25 mm maximum per side are not included.

OUTLINE VERSION	REFERENCES				EUROPEAN PROJECTION	ISSUE DATE
	IEC	JEDEC	EIAJ			
SOT146-1			SC603			~~92-11-17~~ 95-05-24

SO20: plastic small outline package; 20 leads; body width 7.5 mm **SOT163-1**

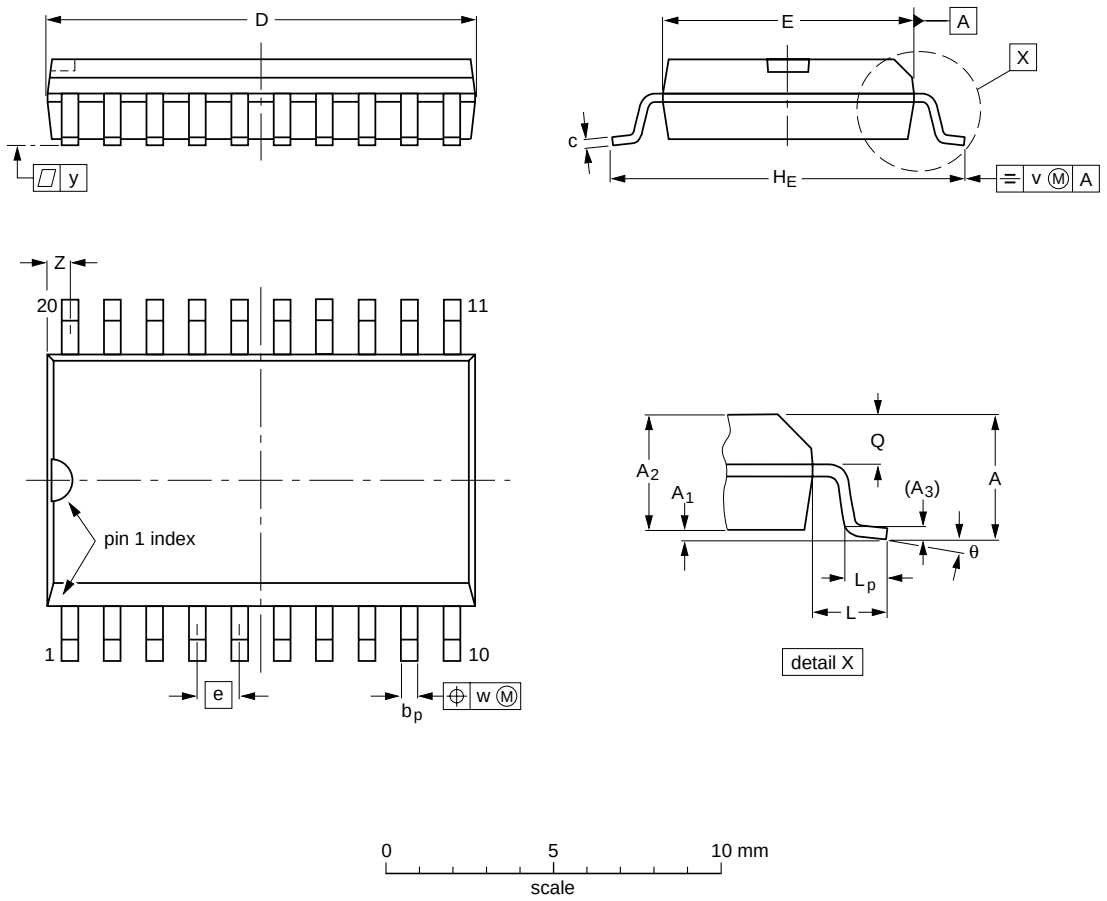

DIMENSIONS (inch dimensions are derived from the original mm dimensions)

UNIT	A max.	A_1	A_2	A_3	b_p	c	D (1)	E (1)	e	H_E	L	L_p	Q	v	w	y	Z (1)	θ
mm	2.65	0.30 0.10	2.45 2.25	0.25	0.49 0.36	0.32 0.23	13.0 12.6	7.6 7.4	1.27	10.65 10.00	1.4	1.1 0.4	1.1 1.0	0.25	0.25	0.1	0.9 0.4	8° 0°
inches	0.10	0.012 0.004	0.096 0.089	0.01	0.019 0.014	0.013 0.009	0.51 0.49	0.30 0.29	0.050	0.419 0.394	0.055	0.043 0.016	0.043 0.039	0.01	0.01	0.004	0.035 0.016	

Note

1. Plastic or metal protrusions of 0.15 mm maximum per side are not included.

OUTLINE VERSION	REFERENCES				EUROPEAN PROJECTION	ISSUE DATE
	IEC	JEDEC	EIAJ			
SOT163-1	075E04	MS-013AC				~~95-01-24~~ 97-05-22

16 SOLDERING

16.1 Introduction

There is no soldering method that is ideal for all IC packages. Wave soldering is often preferred when through-hole and surface mounted components are mixed on one printed-circuit board. However, wave soldering is not always suitable for surface mounted ICs, or for printed-circuits with high population densities. In these situations reflow soldering is often used.

This text gives a very brief insight to a complex technology. A more in-depth account of soldering ICs can be found in our *"IC Package Databook"* (order code 9398 652 90011).

16.2 DIP

16.2.1 Soldering by dipping or by wave

The maximum permissible temperature of the solder is 260 °C; solder at this temperature must not be in contact with the joint for more than 5 seconds. The total contact time of successive solder waves must not exceed 5 seconds.

The device may be mounted up to the seating plane, but the temperature of the plastic body must not exceed the specified maximum storage temperature ($T_{stg\ max}$). If the printed-circuit board has been pre-heated, forced cooling may be necessary immediately after soldering to keep the temperature within the permissible limit.

16.2.2 Repairing soldered joints

Apply a low voltage soldering iron (less than 24 V) to the lead(s) of the package, below the seating plane or not more than 2 mm above it. If the temperature of the soldering iron bit is less than 300 °C it may remain in contact for up to 10 seconds. If the bit temperature is between 300 and 400 °C, contact may be up to 5 seconds.

16.3 SO

16.3.1 Reflow soldering

Reflow soldering techniques are suitable for all SO packages.

Reflow soldering requires solder paste (a suspension of fine solder particles, flux and binding agent) to be applied to the printed-circuit board by screen printing, stencilling or pressure-syringe dispensing before package placement.

Several techniques exist for reflowing; for example, thermal conduction by heated belt. Dwell times vary between 50 and 300 seconds depending on heating method. Typical reflow temperatures range from 215 to 250 °C.

Preheating is necessary to dry the paste and evaporate the binding agent. Preheating duration: 45 minutes at 45 °C.

16.3.2 Wave soldering

Wave soldering techniques can be used for all SO packages if the following conditions are observed:

- A double-wave (a turbulent wave with high upward pressure followed by a smooth laminar wave) soldering technique should be used.
- The longitudinal axis of the package footprint must be parallel to the solder flow.
- The package footprint must incorporate solder thieves at the downstream end.

During placement and before soldering, the package must be fixed with a droplet of adhesive. The adhesive can be applied by screen printing, pin transfer or syringe dispensing. The package can be soldered after the adhesive is cured.

Maximum permissible solder temperature is 260 °C, and maximum duration of package immersion in solder is 10 seconds, if cooled to less than 150 °C within 6 seconds. Typical dwell time is 4 seconds at 250 °C.

A mildly-activated flux will eliminate the need for removal of corrosive residues in most applications.

16.3.3 Repairing soldered joints

Fix the component by first soldering two diagonally-opposite end leads. Use only a low voltage soldering iron (less than 24 V) applied to the flat part of the lead. Contact time must be limited to 10 seconds at up to 300 °C. When using a dedicated tool, all other leads can be soldered in one operation within 2 to 5 seconds between 270 and 320 °C.

17 DEFINITIONS

Data sheet status	
Objective specification	This data sheet contains target or goal specifications for product development.
Preliminary specification	This data sheet contains preliminary data; supplementary data may be published later.
Product specification	This data sheet contains final product specifications.
Limiting values	
Limiting values given are in accordance with the Absolute Maximum Rating System (IEC 134). Stress above one or more of the limiting values may cause permanent damage to the device. These are stress ratings only and operation of the device at these or at any other conditions above those given in the Characteristics sections of the specification is not implied. Exposure to limiting values for extended periods may affect device reliability.	
Application information	
Where application information is given, it is advisory and does not form part of the specification.	

18 LIFE SUPPORT APPLICATIONS

These products are not designed for use in life support appliances, devices, or systems where malfunction of these products can reasonably be expected to result in personal injury. Philips customers using or selling these products for use in such applications do so at their own risk and agree to fully indemnify Philips for any damages resulting from such improper use or sale.

19 PURCHASE OF PHILIPS I²C COMPONENTS

Purchase of Philips I²C components conveys a license under the Philips' I²C patent to use the components in the I²C system provided the system conforms to the I²C specification defined by Philips. This specification can be ordered using the code 9398 393 40011.

NOTES

Philips Semiconductors – a worldwide company

Argentina: see South America

Australia: 34 Waterloo Road, NORTH RYDE, NSW 2113, Tel. +61 2 9805 4455, Fax. +61 2 9805 4466

Austria: Computerstr. 6, A-1101 WIEN, P.O. Box 213, Tel. +43 160 1010, Fax. +43 160 101 1210

Belarus: Hotel Minsk Business Center, Bld. 3, r. 1211, Volodarski Str. 6, 220050 MINSK, Tel. +375 172 200 733, Fax. +375 172 200 773

Belgium: see The Netherlands

Brazil: see South America

Bulgaria: Philips Bulgaria Ltd., Energoproject, 15th floor, 51 James Bourchier Blvd., 1407 SOFIA, Tel. +359 2 689 211, Fax. +359 2 689 102

Canada: PHILIPS SEMICONDUCTORS/COMPONENTS, Tel. +1 800 234 7381

China/Hong Kong: 501 Hong Kong Industrial Technology Centre, 72 Tat Chee Avenue, Kowloon Tong, HONG KONG, Tel. +852 2319 7888, Fax. +852 2319 7700

Colombia: see South America

Czech Republic: see Austria

Denmark: Prags Boulevard 80, PB 1919, DK-2300 COPENHAGEN S, Tel. +45 32 88 2636, Fax. +45 31 57 0044

Finland: Sinikalliontie 3, FIN-02630 ESPOO, Tel. +358 9 615800, Fax. +358 9 61580920

France: 4 Rue du Port-aux-Vins, BP317, 92156 SURESNES Cedex, Tel. +33 1 40 99 6161, Fax. +33 1 40 99 6427

Germany: Hammerbrookstraße 69, D-20097 HAMBURG, Tel. +49 40 23 53 60, Fax. +49 40 23 536 300

Greece: No. 15, 25th March Street, GR 17778 TAVROS/ATHENS, Tel. +30 1 4894 339/239, Fax. +30 1 4814 240

Hungary: see Austria

India: Philips INDIA Ltd, Band Box Building, 2nd floor, 254-D, Dr. Annie Besant Road, Worli, MUMBAI 400 025, Tel. +91 22 493 8541, Fax. +91 22 493 0966

Indonesia: see Singapore

Ireland: Newstead, Clonskeagh, DUBLIN 14, Tel. +353 1 7640 000, Fax. +353 1 7640 200

Israel: RAPAC Electronics, 7 Kehilat Saloniki St, PO Box 18053, TEL AVIV 61180, Tel. +972 3 645 0444, Fax. +972 3 649 1007

Italy: PHILIPS SEMICONDUCTORS, Piazza IV Novembre 3, 20124 MILANO, Tel. +39 2 6752 2531, Fax. +39 2 6752 2557

Japan: Philips Bldg 13-37, Kohnan 2-chome, Minato-ku, TOKYO 108, Tel. +81 3 3740 5130, Fax. +81 3 3740 5077

Korea: Philips House, 260-199 Itaewon-dong, Yongsan-ku, SEOUL, Tel. +82 2 709 1412, Fax. +82 2 709 1415

Malaysia: No. 76 Jalan Universiti, 46200 PETALING JAYA, SELANGOR, Tel. +60 3 750 5214, Fax. +60 3 757 4880

Mexico: 5900 Gateway East, Suite 200, EL PASO, TEXAS 79905, Tel. +9-5 800 234 7381

Middle East: see Italy

Netherlands: Postbus 90050, 5600 PB EINDHOVEN, Bldg. VB, Tel. +31 40 27 82785, Fax. +31 40 27 88399

New Zealand: 2 Wagener Place, C.P.O. Box 1041, AUCKLAND, Tel. +64 9 849 4160, Fax. +64 9 849 7811

Norway: Box 1, Manglerud 0612, OSLO, Tel. +47 22 74 8000, Fax. +47 22 74 8341

Philippines: Philips Semiconductors Philippines Inc., 106 Valero St. Salcedo Village, P.O. Box 2108 MCC, MAKATI, Metro MANILA, Tel. +63 2 816 6380, Fax. +63 2 817 3474

Poland: Ul. Lukiska 10, PL 04-123 WARSZAWA, Tel. +48 22 612 2831, Fax. +48 22 612 2327

Portugal: see Spain

Romania: see Italy

Russia: Philips Russia, Ul. Usatcheva 35A, 119048 MOSCOW, Tel. +7 095 755 6918, Fax. +7 095 755 6919

Singapore: Lorong 1, Toa Payoh, SINGAPORE 1231, Tel. +65 350 2538, Fax. +65 251 6500

Slovakia: see Austria

Slovenia: see Italy

South Africa: S.A. PHILIPS Pty Ltd., 195-215 Main Road Martindale, 2092 JOHANNESBURG, P.O. Box 7430 Johannesburg 2000, Tel. +27 11 470 5911, Fax. +27 11 470 5494

South America: Rua do Rocio 220, 5th floor, Suite 51, 04552-903 São Paulo, SÃO PAULO - SP, Brazil, Tel. +55 11 821 2333, Fax. +55 11 829 1849

Spain: Balmes 22, 08007 BARCELONA, Tel. +34 3 301 6312, Fax. +34 3 301 4107

Sweden: Kottbygatan 7, Akalla, S-16485 STOCKHOLM, Tel. +46 8 632 2000, Fax. +46 8 632 2745

Switzerland: Allmendstrasse 140, CH-8027 ZÜRICH, Tel. +41 1 488 2686, Fax. +41 1 481 7730

Taiwan: Philips Semiconductors, 6F, No. 96, Chien Kuo N. Rd., Sec. 1, TAIPEI, Taiwan Tel. +886 2 2134 2865, Fax. +886 2 2134 2874

Thailand: PHILIPS ELECTRONICS (THAILAND) Ltd., 209/2 Sanpavuth-Bangna Road Prakanong, BANGKOK 10260, Tel. +66 2 745 4090, Fax. +66 2 398 0793

Turkey: Talatpasa Cad. No. 5, 80640 GÜLTEPE/ISTANBUL, Tel. +90 212 279 2770, Fax. +90 212 282 6707

Ukraine: PHILIPS UKRAINE, 4 Patrice Lumumba str., Building B, Floor 7, 252042 KIEV, Tel. +380 44 264 2776, Fax. +380 44 268 0461

United Kingdom: Philips Semiconductors Ltd., 276 Bath Road, Hayes, MIDDLESEX UB3 5BX, Tel. +44 181 730 5000, Fax. +44 181 754 8421

United States: 811 East Arques Avenue, SUNNYVALE, CA 94088-3409, Tel. +1 800 234 7381

Uruguay: see South America

Vietnam: see Singapore

Yugoslavia: PHILIPS, Trg N. Pasica 5/v, 11000 BEOGRAD, Tel. +381 11 625 344, Fax.+381 11 635 777

For all other countries apply to: Philips Semiconductors, Marketing & Sales Communications, Building BE-p, P.O. Box 218, 5600 MD EINDHOVEN, The Netherlands, Fax. +31 40 27 24825

Internet: http://www.semiconductors.philips.com

© Philips Electronics N.V. 1997 SCA55

All rights are reserved. Reproduction in whole or in part is prohibited without the prior written consent of the copyright owner.

The information presented in this document does not form part of any quotation or contract, is believed to be accurate and reliable and may be changed without notice. No liability will be accepted by the publisher for any consequence of its use. Publication thereof does not convey nor imply any license under patent- or other industrial or intellectual property rights.

Printed in The Netherlands 417067/00/04/pp40 Date of release: 1997 Oct 21 Document order number: 9397 750 02932

Let's make things better.

Philips Semiconductors

PHILIPS