STPS4045C

Power Schottky rectifiers

Features

- Very small conduction losses
- Negligible switching losses
- Extremely fast switching
- Low thermal resistance
- Avalanche capability specified
- ECOPACK®2 compliant component (STPS4045CT)

Description

This dual center tap Schottky rectifier is suited for switchmode power supply and high frequency DC to DC converters.

Packaged in TO-247 or TO-220AB this device is intended for use in low voltage, high frequency inverters, free wheeling and polarity protection applications.

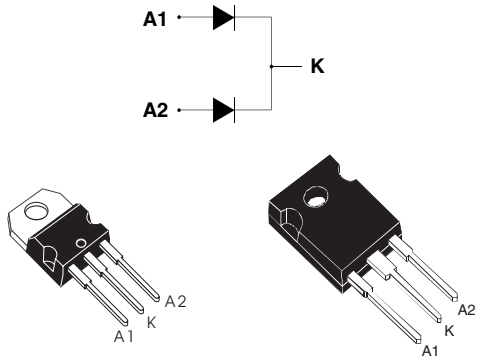

TO-220AB
STPS4045CT

TO-247
STPS4045CW

Table 1. Device summary

Symbol	Value
$I_{F(AV)}$	2 x 20 A
V_{RRM}	45 V
$T_{j\ (max)}$	175 °C
$V_{F\ (max)}$	0.63 V

1 Characteristics

Table 2. Absolute ratings (limiting values, per diode)

Symbol	Parameter				Value	Unit
V_{RRM}	Repetitive peak reverse voltage				45	V
$I_{F(RMS)}$	Forward rms current				30	A
$I_{F(AV)}$	Average forward current	TO-247	T_C = 150 °C, δ = 0.5	Per diode	20	A
			T_C = 145 °C, δ = 0.5	Per device	40	
		TO-220AB	T_C = 145 °C, δ = 0.5	Per diode	20	A
			T_C = 130 °C, δ = 0.5	Per device	40	
I_{FSM}	Surge non repetitive forward current		t_p = 10 ms sinusoidal		220	A
I_{RRM}	Repetitive peak reverse current		t_p = 2 µs square F=1 kHz		1	A
I_{RSM}	Non repetitive peak reverse current		t_p = 100 µs square		3	A
P_{ARM}	Repetitive peak avalanche power		t_p = 1 µs T_j = 25 °C		6000	W
T_{stg}	Storage temperature range				-65 to + 175	°C
T_j	Maximum operating junction temperature(1)				175	°C
dV/dt	Critical rate of rise reverse voltage				10000	V/µs

1. $\frac{dPtot}{dTj} < \frac{1}{Rth(j-a)}$ condition to avoid thermal runaway for a diode on its own heatsink

Table 3. Thermal resistances

Symbol	Parameter			Value	Unit
$R_{th\ (j-c)}$	Junction to case	TO-247	Per diode	1.5	°C/W
			Total	0.8	
		TO-220AB	Per diode	1.8	
			Total	1.3	
$R_{th\ (c)}$	Coupling	TO-247		0.1	
		TO-220AB		0.8	

When the diodes 1 and 2 are used simultaneously :
ΔT_j(diode 1) = P(diode1) x $R_{th(j-c)}$(Per diode) + P(diode 2) x $R_{th(c)}$

Table 4. Static electrical characteristics (per diode)

Symbol	Parameter	Tests conditions		Min.	Typ.	Max.	Unit
I_R (1)	Reverse leakage current	T_j = 25 °C	$V_R = V_{RRM}$	-	-	200	µA
		T_j = 125 °C		-	11	40	mA
V_F (1)	Forward voltage drop	T_j = 25 °C	I_F = 20 A	-	-	0.76	V
		T_j = 125 °C		-	0.56	0.63	
		T_j = 25 °C	I_F = 40 A	-	-	0.94	
		T_j = 125 °C		-	0.7	0.83	

1. Pulse test : tp = 380 µs, δ < 2%

To evaluate the conduction losses use the following equation :
$P = 0.43x\ I_{F(AV)} + 0.01x\ I_F{}^2{}_{(RMS)}$

Figure 1. Average forward power dissipation versus average forward current (per diode)

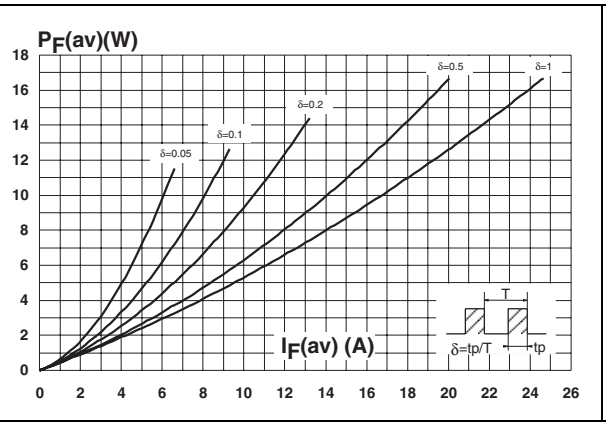

Figure 2. Average forward current versus ambient temperature (δ = 0.5 per diode)

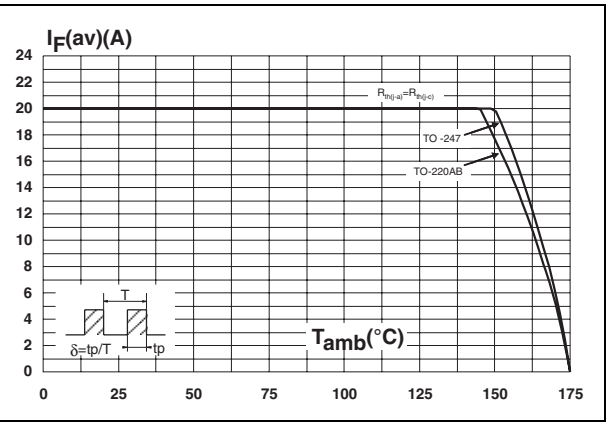

Figure 3. Normalized avalanche power derating versus pulse duration

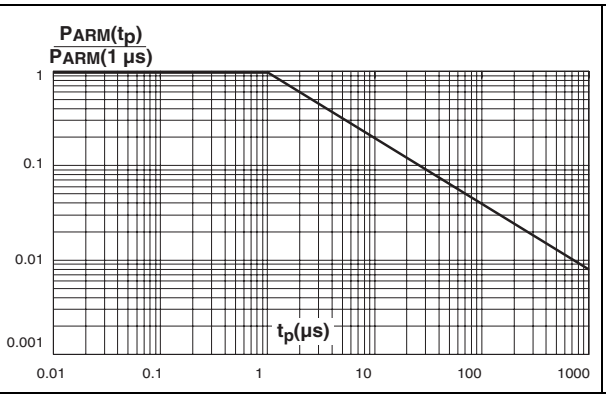

Figure 4. Normalized avalanche power derating versus junction temperature

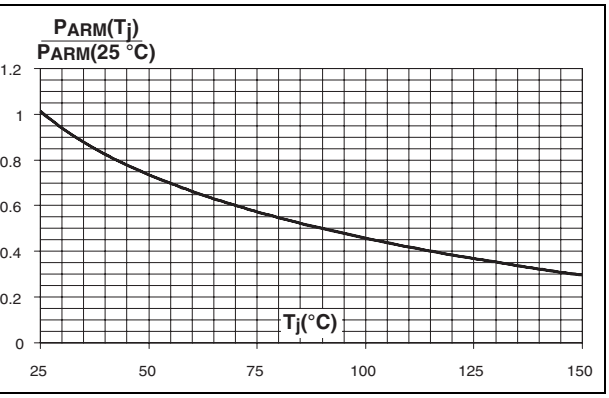

Figure 5. Non repetitive surge peak forward current versus overload duration (maximum values, per diode)

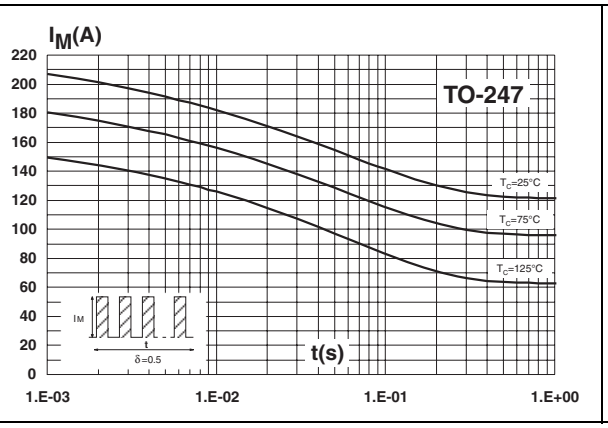

Figure 6. Non repetitive surge peak forward current versus overload duration (maximum values, per diode)

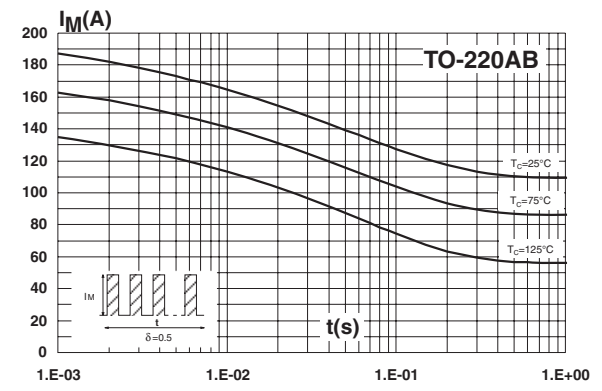

Figure 7. Relative variation of thermal impedance junction to case versus pulse duration

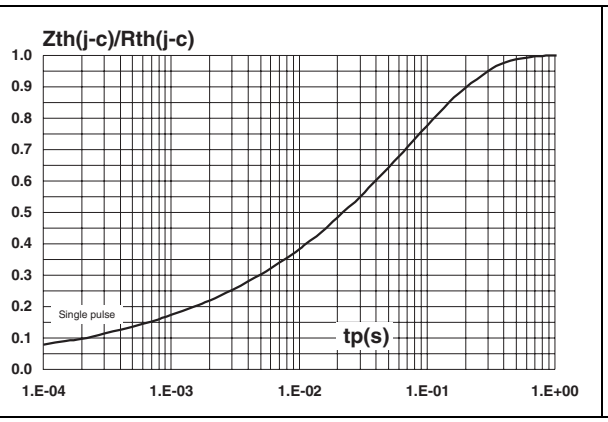

Figure 8. Reverse leakage current versus reverse voltage applied (typical values, per diode)

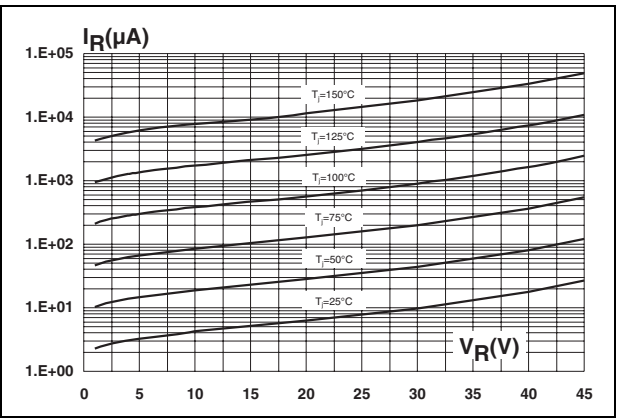

Figure 9. Junction capacitance versus reverse voltage applied (typical values, per diode)

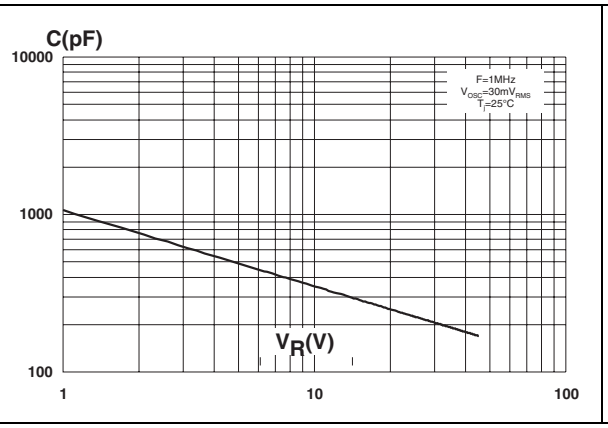

Figure 10. Forward voltage drop versus forward current (per diode)

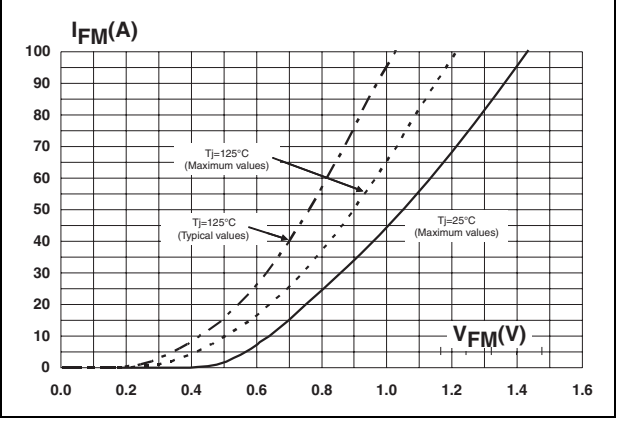

2 Package information

- Epoxy meets UL94,V0
- Cooling method: by conduction (C)
- Recommended torque values: TO-220AB 0.4 to 0.6 N·m, TO-247 0.55 N·m
- Maximum torque value: TO-247 1.0 N·m

In order to meet environmental requirements, ST offers these devices in different grades of ECOPACK® packages, depending on their level of environmental compliance. ECOPACK® specifications, grade definitions and product status are available at: www.st.com. ECOPACK® is an ST trademark.

Table 5. TO-220AB dimensions

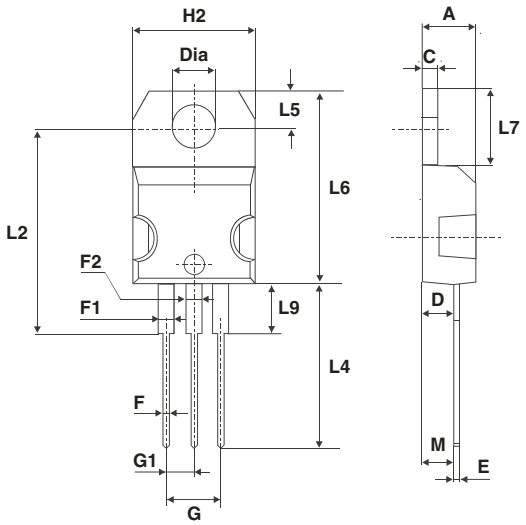

Ref.	Dimensions			
	Millimeters		Inches	
	Min.	Max.	Min.	Max.
A	4.40	4.60	0.173	0.181
C	1.23	1.32	0.048	0.051
D	2.40	2.72	0.094	0.107
E	0.49	0.70	0.019	0.027
F	0.61	0.88	0.024	0.034
F1	1.14	1.70	0.044	0.066
F2	1.14	1.70	0.044	0.066
G	4.95	5.15	0.194	0.202
G1	2.40	2.70	0.094	0.106
H2	10	10.40	0.393	0.409
L2	16.4 typ.		0.645 typ.	
L4	13	14	0.511	0.551
L5	2.65	2.95	0.104	0.116
L6	15.25	15.75	0.600	0.620
L7	6.20	6.60	0.244	0.259
L9	3.50	3.93	0.137	0.154
M	2.6 typ.		0.102 typ.	
Diam.	3.75	3.85	0.147	0.151

Table 6. TO-247 dimensions

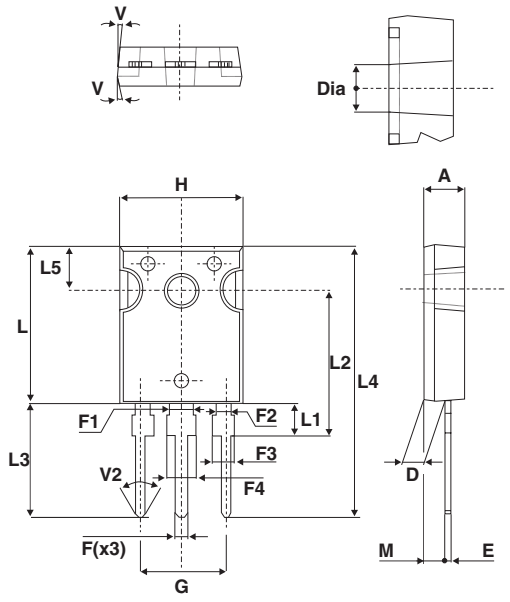

Ref.	Dimensions					
	Millimeters			Inches		
	Min.	Typ.	Max.	Min.	Typ.	Max.
A	4.85		5.16	0.191		0.203
D	2.20		2.60	0.086		0.102
E	0.40		0.80	0.015		0.031
F	1.00		1.40	0.039		0.055
F1		3.00			0.118	
F2		2.00			0.079	
F3	1.90		2.40	0.075		0.094
F4	3.00		3.40	0.118		0.134
G		10.90			0.429	
H	15.45		16.03	0.608		0.631
L	19.85		21.09	0.781		0.830
L1	3.70		4.30	0.146		0.169
L2	18.30		19.13	0.720		0.753
L3	14.20		20.30	0.559		0.799
L4	34.05		41.38	1.341		1.629
L5	5.35		6.30	0.211		0.248
M	2.00		3.00	0.079		0.118
V		5°			5°	
V2		60°			60°	
Dia.	3.55		3.65	0.140		0.144

3 Ordering information

Table 7. Ordering information

Order code	Marking	Package	Weight	Base qty.	Delivery mode
STPS4045CW	STPS4045CW	TO-247	4.46 g	30	Tube
STPS4045CT	STPS4045CT	TO-220AB	1.9 g	50	Tube

4 Revision history

Table 8. Document revision history

Date	Revision	Changes
July-2003	4C	Previous issue.
09-Nov-2009	5	Added TO-220AB package. Removed SOT-93 package.

Please Read Carefully:

Information in this document is provided solely in connection with ST products. STMicroelectronics NV and its subsidiaries (“ST”) reserve the right to make changes, corrections, modifications or improvements, to this document, and the products and services described herein at any time, without notice.

All ST products are sold pursuant to ST’s terms and conditions of sale.

Purchasers are solely responsible for the choice, selection and use of the ST products and services described herein, and ST assumes no liability whatsoever relating to the choice, selection or use of the ST products and services described herein.

No license, express or implied, by estoppel or otherwise, to any intellectual property rights is granted under this document. If any part of this document refers to any third party products or services it shall not be deemed a license grant by ST for the use of such third party products or services, or any intellectual property contained therein or considered as a warranty covering the use in any manner whatsoever of such third party products or services or any intellectual property contained therein.

UNLESS OTHERWISE SET FORTH IN ST’S TERMS AND CONDITIONS OF SALE ST DISCLAIMS ANY EXPRESS OR IMPLIED WARRANTY WITH RESPECT TO THE USE AND/OR SALE OF ST PRODUCTS INCLUDING WITHOUT LIMITATION IMPLIED WARRANTIES OF MERCHANTABILITY, FITNESS FOR A PARTICULAR PURPOSE (AND THEIR EQUIVALENTS UNDER THE LAWS OF ANY JURISDICTION), OR INFRINGEMENT OF ANY PATENT, COPYRIGHT OR OTHER INTELLECTUAL PROPERTY RIGHT.

UNLESS EXPRESSLY APPROVED IN WRITING BY AN AUTHORIZED ST REPRESENTATIVE, ST PRODUCTS ARE NOT RECOMMENDED, AUTHORIZED OR WARRANTED FOR USE IN MILITARY, AIR CRAFT, SPACE, LIFE SAVING, OR LIFE SUSTAINING APPLICATIONS, NOR IN PRODUCTS OR SYSTEMS WHERE FAILURE OR MALFUNCTION MAY RESULT IN PERSONAL INJURY, DEATH, OR SEVERE PROPERTY OR ENVIRONMENTAL DAMAGE. ST PRODUCTS WHICH ARE NOT SPECIFIED AS "AUTOMOTIVE GRADE" MAY ONLY BE USED IN AUTOMOTIVE APPLICATIONS AT USER’S OWN RISK.

Resale of ST products with provisions different from the statements and/or technical features set forth in this document shall immediately void any warranty granted by ST for the ST product or service described herein and shall not create or extend in any manner whatsoever, any liability of ST.

ST and the ST logo are trademarks or registered trademarks of ST in various countries.

Information in this document supersedes and replaces all information previously supplied.

The ST logo is a registered trademark of STMicroelectronics. All other names are the property of their respective owners.

© 2009 STMicroelectronics - All rights reserved

STMicroelectronics group of companies

Australia - Belgium - Brazil - Canada - China - Czech Republic - Finland - France - Germany - Hong Kong - India - Israel - Italy - Japan - Malaysia - Malta - Morocco - Philippines - Singapore - Spain - Sweden - Switzerland - United Kingdom - United States of America

www.st.com