STV9379

VERTICAL DEFLECTION BOOSTER

- POWER AMPLIFIER
- FLYBACK GENERATOR
- THERMAL PROTECTION
- OUTPUT CURRENT UP TO $2.0A_{PP}$
- FLYBACK VOLTAGE UP TO 90V (on Pin 5)
- SUITABLE FOR DC COUPLING APPLICATION

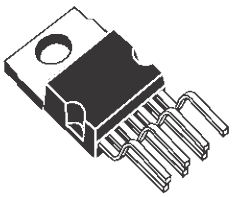

HEPTAWATT
(Plastic Package)

ORDER CODE : STV9379

DESCRIPTION

Designed for monitors and high performance TVs, the STV9379 vertical deflection booster delivers flyback voltages close to 90V.
The STV9379 operates with supplies up to 42V and provides up to $2A_{PP}$ output current to drive the yoke.
The STV9379 is offered in HEPTAWATT package.

PIN CONNECTIONS

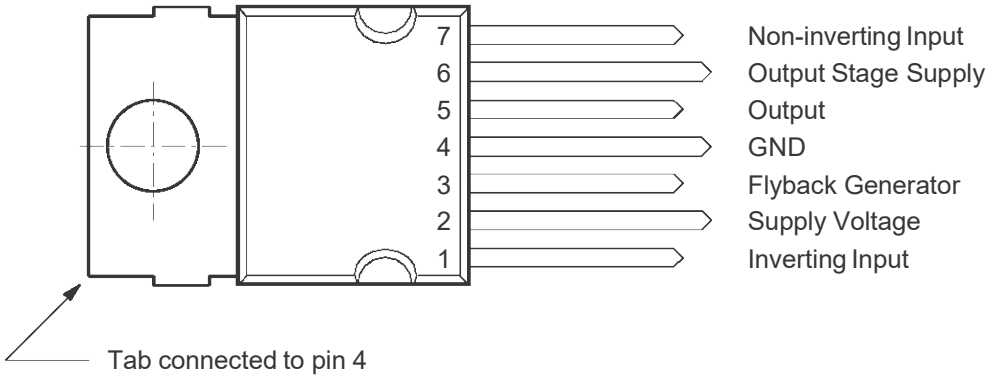

9379-01.EPS

BLOCK DIAGRAM

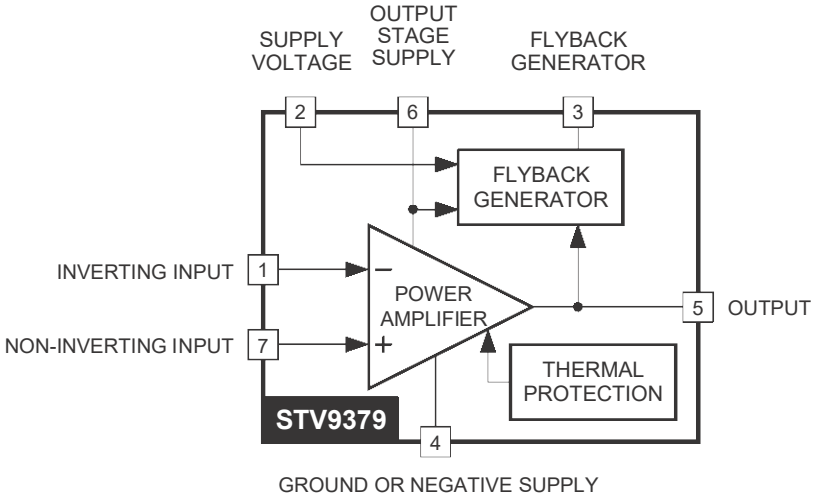

9379-02.EPS

ABSOLUTE MAXIMUM RATINGS

Symbol	Parameter	Value	Unit
V_S	Supply Voltage (Pin 2) (see note 1)	50	V
V_6	Flyback Peak Voltage (Pin 6) (see note 1)	100	V
V_1 , V_7	Amplifier Input Voltage (Pins 1-7) (see note 1)	- 0.3, + V_S	V
I_O	Maximum Output Peak Current (see notes 2 and 3)	1.5	A
I_3	Maximum Sink Current (first part of flyback) (t < 1ms)	1.5	A
I_3	Maximum Source Current (t < 1ms)	1.5	A
V_{ESD}	ESD susceptibility : EIAJ Norm (200pF discharged through 0Ω)	300	V
T_{oper}	Operating Ambient Temperature	- 20, + 75	°C
T_{stg}	Storage Temperature	- 40, + 150	°C
T_j	Junction Temperature	+150	°C

9379-01.TBL

Notes :
1. Versus Pin 4.
2. The output current can reach 4A peak for t ≤ 10µs (up to 120Hz).
3. Provided SOAR is respected (see Figures 1 and 2).

THERMAL DATA

Symbol	Parameter		Value	Unit
$R_{th\ (j-c)}$	Junction-case Thermal Resistance	Max.	3	°C/W
T_t	Temperature for Thermal Shutdown		150	°C
ΔT_t	Hysteresis on T_t		10	°C
T_{jr}	Recommended Max. Junction Temperature		120	°C

9379-02.TBL

ELECTRICAL CHARACTERISTICS

(V_S = 42V, T_A = 25°C, unless otherwise specified)

Symbol	Parameter	Test Conditions	Min.	Typ.	Max.	Unit
V_S	Operating Supply Voltage Range	Versus Pin 4	10		42	V
I_2	Pin 2 Quiescent Current	I_3 = 0, I_5 = 0		10	20	mA
I_6	Pin 6 Quiescent Current	I_3 = 0, I_5 = 0	5	10	30	mA
I_O	Max. Peak Output Current				1	A
I_1	Amplifier Bias Current	V_1 = 25V, V_7 = 26V		- 0.15	- 1	µA
I_7	Amplifier Bias Current	V_1 = 26V, V_7 = 25V		- 0.15	- 1	µA
V_{IO}	Offset Voltage				7	mV
$\Delta V_{IO}/dt$	Offset Drift versus Temperature			- 10		µV/°C
GV	Voltage Gain		80			dB
V_{5L}	Output Saturation Voltage to GND (Pin 4)	I_5 = 1A		1	1.5	V
V_{5H}	Output Saturation Voltage to Supply (Pin 6)	I_5 = - 1A		1.6	2.1	V
V_{D5-6}	Diode Forward Voltage between Pins 5-6	I_5 = 1A		1.5	2	V
V_{D3-2}	Diode Forward Voltage between Pins 3-2	I_3 = 1A		1.5	2	V
V_{3L}	Saturation Voltage on Pin 3	I_3 = 20mA		0.8	1.2	V
V_{3SH}	Saturation Voltage to Pin 2 (2nd part of flyback)	I_3 = - 1A		2.1	2.9	V

9379-03.TBL

APPLICATION CIRCUITS

AC COUPLING

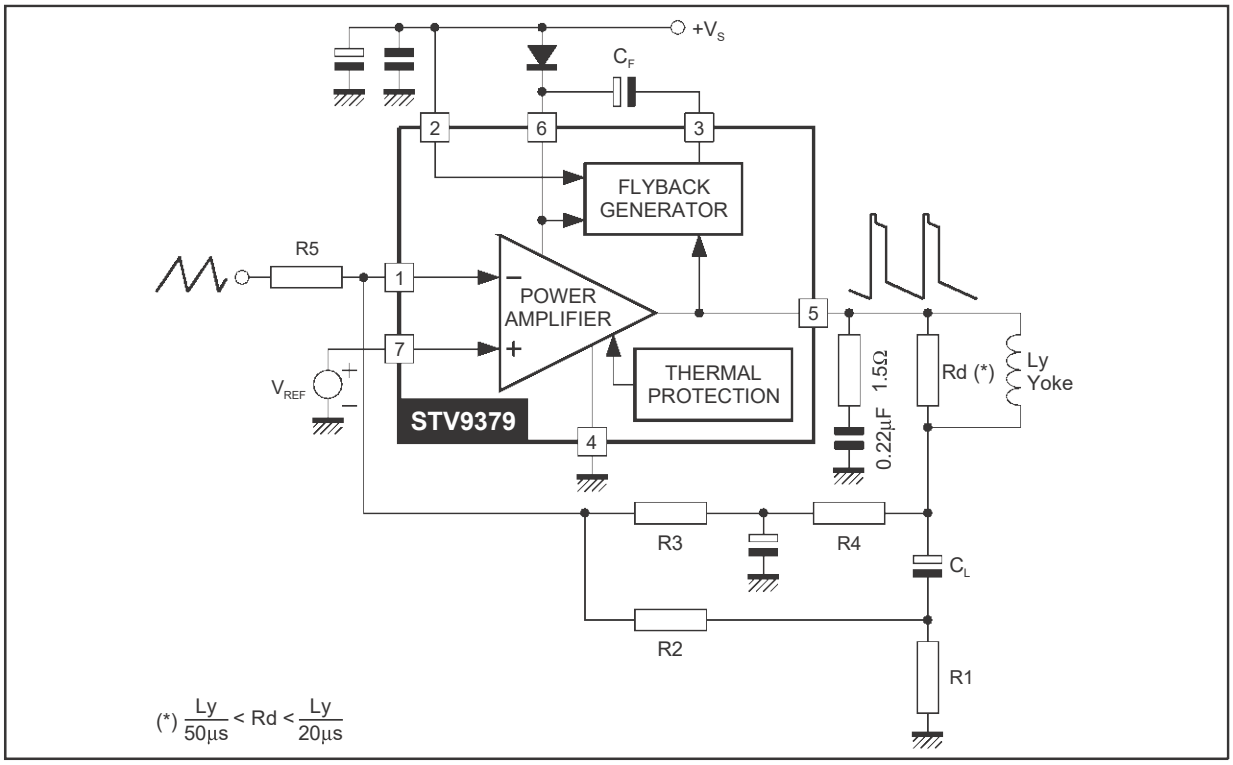

9379-03.EPS

APPLICATION CIRCUITS (continued)
DC COUPLING

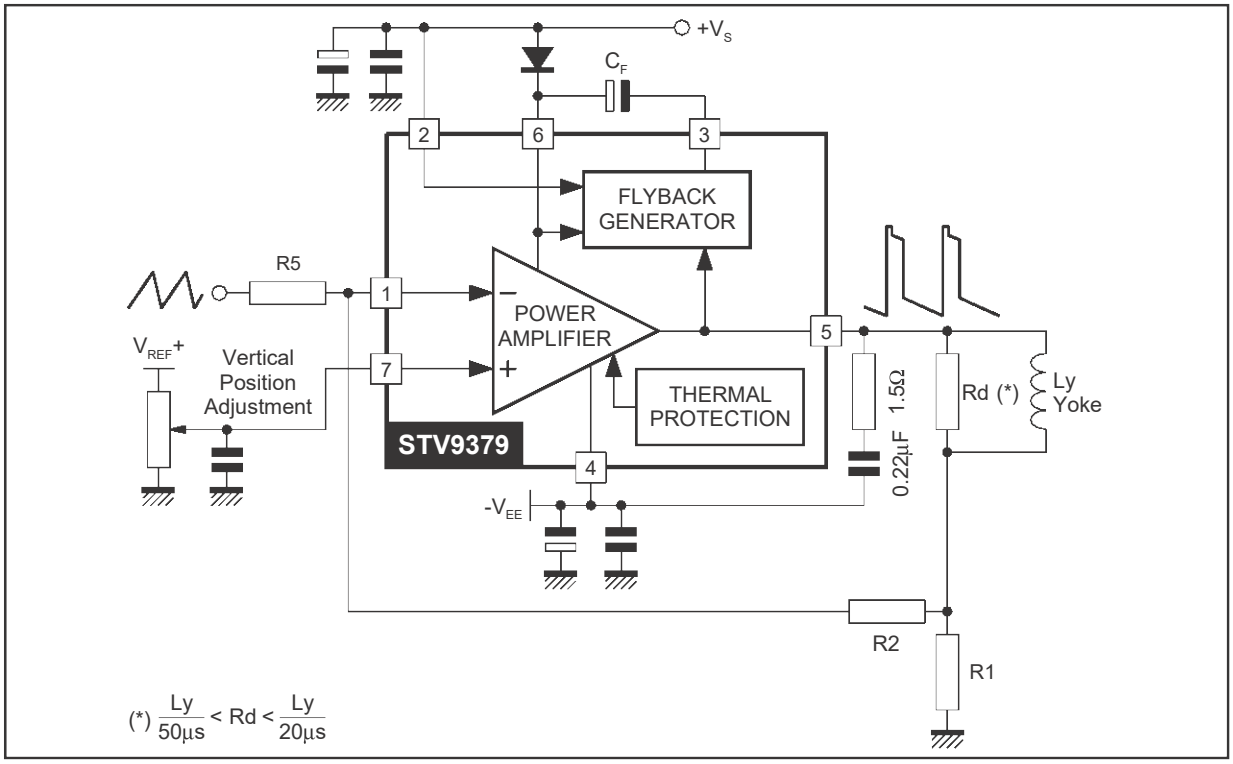

Figure 1 : Output Transistors SOA (for secondary breakdown)

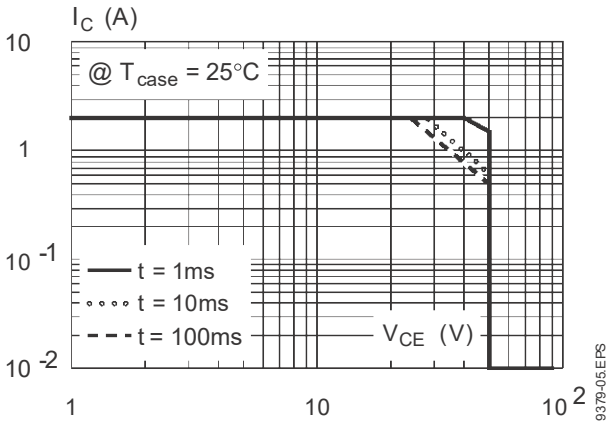

Figure 2 : Secondary Breakdown Temperature Derating Curve (ISB = secondary breakdown current)

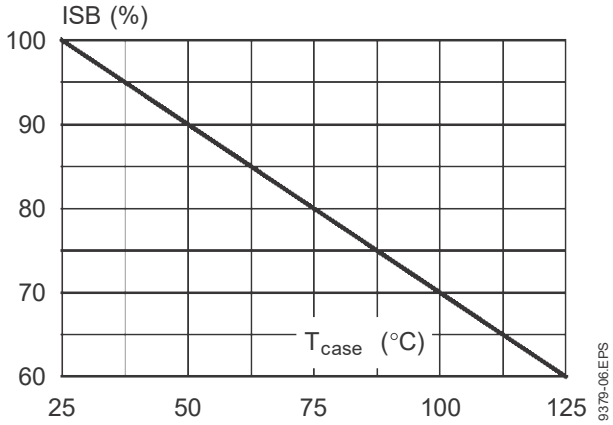

PACKAGE MECHANICAL DATA : 7 PINS - PLASTIC HEPTAWATT

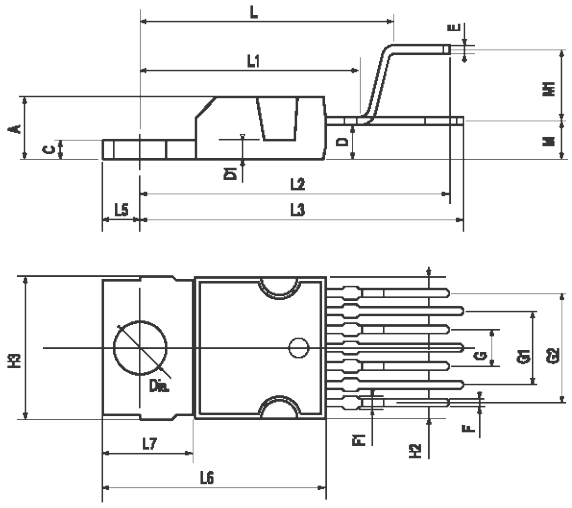

PM-HEPTV.EPS

Dimensions	Millimeters			Inches		
	Min.	Typ.	Max.	Min.	Typ.	Max.
A			4.8			0.189
C			1.37			0.054
D	2.4		2.8	0.094		0.110
D1	1.2		1.35	0.047		0.053
E	0.35		0.55	0.014		0.022
F	0.6		08	0.024		0.031
F1			0.9			0.035
G	2.41	2.54	2.67	0.095	0.100	0.105
G1	4.91	5.08	5.21	0.193	0.200	0.205
G2	7.49	7.62	7.8	0.295	0.300	0.307
H2			10.4			0.409
H3	10.05		10.4	0.396		0.409
L		16.97			0.668	
L1		14.92			0.587	
L2		21.54			0.848	
L3		22.62			0.891	
L5	2.6		3	0.102		0.118
L6	15.1		15.8	0.594		0.622
L7	6		6.6	0.236		0.260
M		2.8			0.110	
M1		5.08			0.200	
Dia.	3.65		3.85	0.144		0.152

HEPTV.TBL

Information furnished is believed to be accurate and reliable. However, STMicroelectronics assumes no responsibility for the consequences of use of such information nor for any infringement of patents or other rights of third parties which may result from its use. No licence is granted by implication or otherwise under any patent or patent rights of STMicroelectronics. Specifications mentioned in this publication are subject to change without notice. This publication supersedes and replaces all information previously supplied. STMicroelectronics products are not authorized for use as critical components in lifesupport devices or systems without express written approval of STMicroelectronics.

The ST logo is a registered trademark of STMicroelectronics

© 1998 STMicroelectronics - All Rights Reserved

Purchase of I²C Components of STMicroelectronics, conveys a license under the Philips I²C Patent. Rights to use these components in a I²C system, is granted provided that the system conforms to the I²C Standard Specifications as defined by Philips.

STMicroelectronics GROUP OF COMPANIES

Australia - Brazil - Canada - China - France - Germany - Italy - Japan - Korea - Malaysia - Malta - Mexico - Morocco - The Netherlands Singapore - Spain - Sweden - Switzerland - Taiwan - Thailand - United Kingdom - U.S.A.