TRIPLE 3-INPUT NAND GATE

DESCRIPTION

The T74LS10 is a high speed TRIPLE 3-INPUT NAND GATE fabricated in LOW POWER SCHOTTKY technology.

SCHEMATIC DIAGRAM

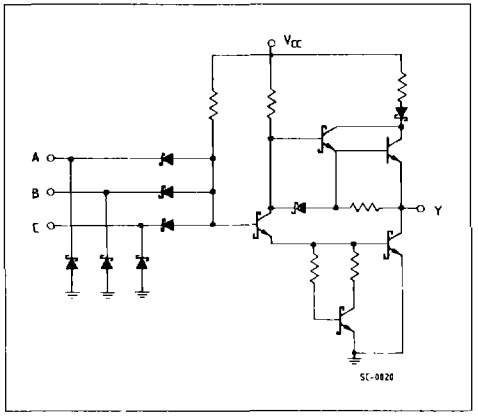

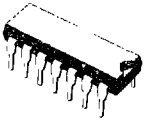

B1
(Plastic Package)

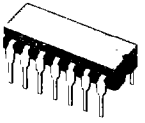

D1
(Ceramic Package)

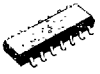

M1
(Micro Package)

C1
(Plastic Chip Carrier)

ORDER CODES :

T74LS10 D1	T74LS10 C1
T74LS10 B1	T74LS10 M1

PIN CONNECTION (top view)

DUAL IN LINE

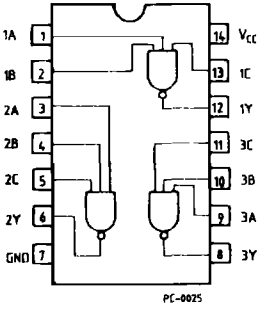

CHIP CARRIER

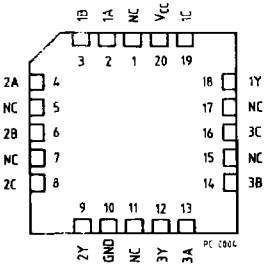

NC = No Internal Connection

LOGIC DIAGRAM AND TRUTH TABLE

A	B	C	Y
L	X	X	H
X	L	X	H
X	X	L	H
H	H	H	L

L = LOW Voltage Level
H = HIGH Voltage Level
X = Don't Care

ABSOLUTE MAXIMUM RATINGS

Symbol	Parameter	Value	Unit
V_{CC}	Supply Voltage	– 0 5 to 7	V
V_I	Input Voltage, Applied to Input	– 0.5 to 15	V
V_O	Output Voltage, Applied to Output	– 0.5 to 5.5	V
I_I	Input Current, Into Inputs	– 30 to 5	mA
I_O	Output Current, Into Outputs	50	mA

Stresses in excess of those listed under "Absolute Maximum Ratings" may cause permanent damage to the device. This is a stress rating only and functional operation of the device at these or any other conditions in excess of those indicated in the operational sections of this specification is not implied Exposure to absolute maximum rating conditions for extended periods may affect device reliability

GUARANTEED OPERATING RANGE

Part Numbers	Supply Voltage			Temperature
	Min.	Typ.	Max.	
T74LS10XX	4.75 V	5.0 V	5 25 V	0 °C to + 70 °C

XX = package type

DC CHARACTERISTICS OVER OPERATING TEMPERATURE RANGE

Symbol	Parameter	Limits			Test Condition (note 1)		Unit
		Min.	Typ. (*)	Max.			
V_{IH}	Input HIGH Voltage	2.0			Guaranteed Input HIGH Voltage		V
V_{IL}	Input LOW Voltage			0.8	Guaranteed Input LOW Voltage		V
V_{CD}	Input Clamp Diode Voltage		- 0.65	- 1.5	V_{CC} = MIN, I_{IN} = -18 mA		V
V_{OH}	Output HIGH Voltage	2 7	3 4		V_{CC} = MIN. I_{OH} = -400 µA. V_{IN} = V_{IL}		V
V_{OL}	Output LOW Voltage		0.25	0.4	I_{OL} = 4.0 mA	V_{CC} = MIN	V
			0.35	0 5	I_{OL} = 8.0 mA	V_{IN} = 2.0 V	V
I_{IH}	Input HIGH Current		1.0	20 0.1	V_{CC} = MAX, V_{IN} = 2.7 V V_{CC} = MAX, V_{IN} = 7.0 V		µA mA
I_{IL}	Input LOW Current			- 0.36	V_{CC} = MAX, V_{IN} = 0.4 V		mA
I_{OS}	Output Short Circuit Current (note 2)	- 20		- 100	V_{CC} = MAX, V_{OUT} = 0 V		mA
I_{CCH}	Supply Current HIGH		0.6	1.2	V_{CC} = MAX, V_{IN} = 0 V		mA
I_{CCL}	Supply Current LOW		1.8	3.3	V_{CC} = MAX. Inputs Open		mA

Notes : 1 For conditions shown as MIN or MAX, use the appropriate value specified under guaranteed operating ranges
2 Not more than one output should be shorted at a time
(*) Typical values are at V_{CC} = 5 0 V. T_A = 25 °C

AC CHARACTERISTICS: $T_A = 25^oC$ (for AC test circuits and waveforms see databook introduction)

Symbol	Parameter	Limits			Test Conditions	Unit
		Min.	Typ.	Max.		
t_{PLH}	Turn Off Delay, Input to Output		9	15	V_{CC} = 5.0 V C_L = 15 pF	ns
t_{PHL}	Turn On Delay, Input to Output		10	15		ns