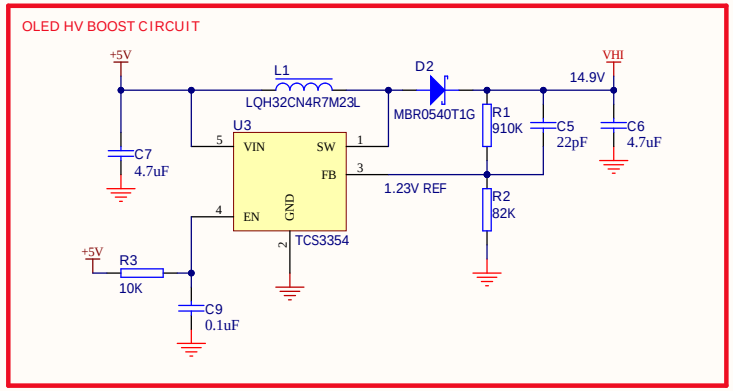

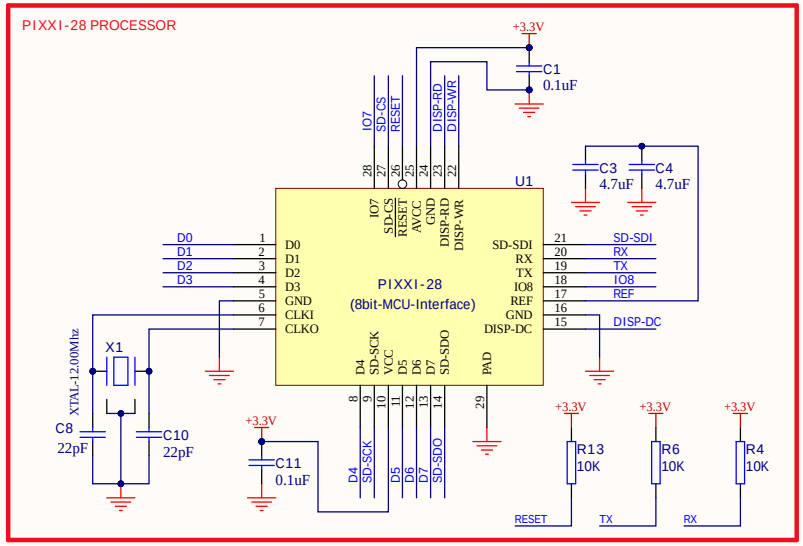

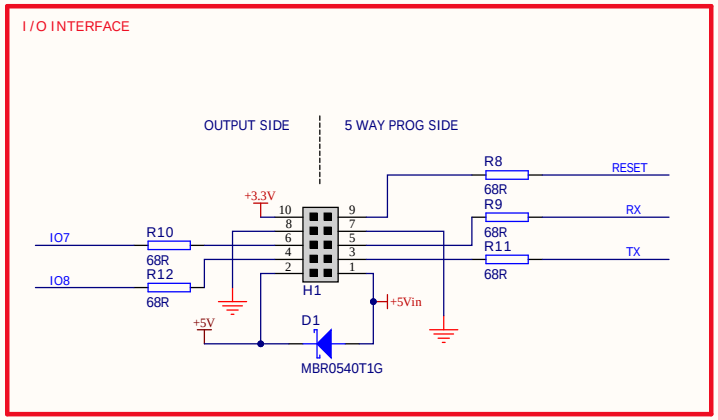

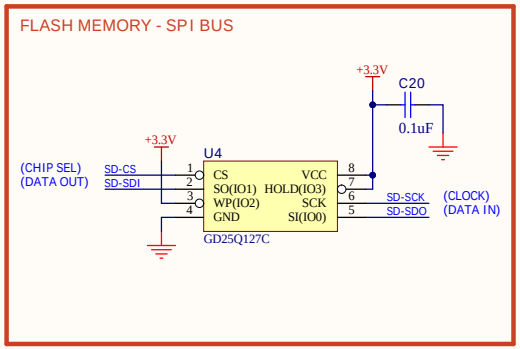

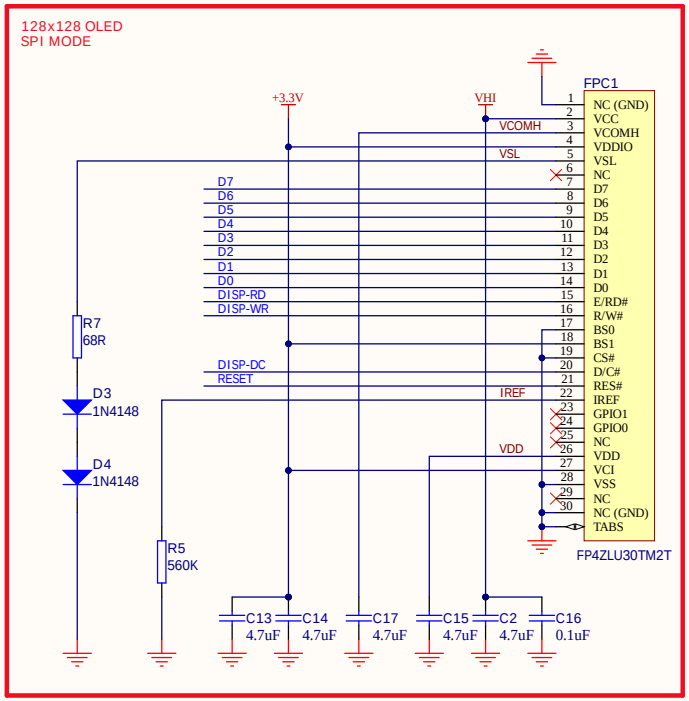

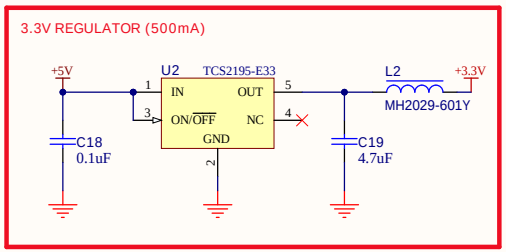

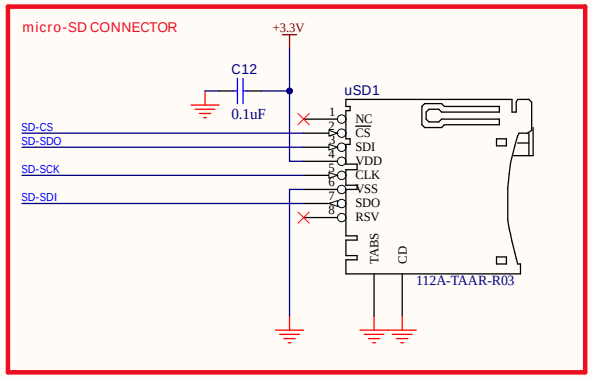

FID1

FID2

http://www.4dsystems.com.au

Title: uOLED-128P2

Revision: 1.0

Date: 17/05/2022

Time: 4:47:22 pm

4D SYSTEMS
TURNING TECHNOLOGY INTO ART

File: uOLED-128P2-REV1.0.SchDoc