TDA9302H

TV VERTICAL DEFLECTION OUTPUT CIRCUIT

FEATURES

- Power Amplifier
- Flyback Generator
- Thermal Protection

DESCRIPTION

The TDA9302H is a monolithic integrated circuit in Heptawatt™ package. It is a high efficiency power booster for direct driving of vertical windings of TV yokes. It is intended for use in color and black & white television as well as in monitors and displays.

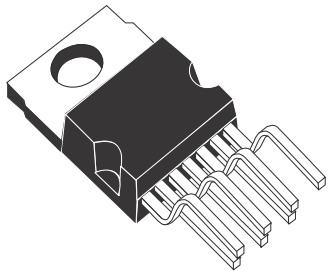

HEPTAWATT
(Plastic Package)
ORDER CODE: TDA9302H

PIN CONNECTION (top view)

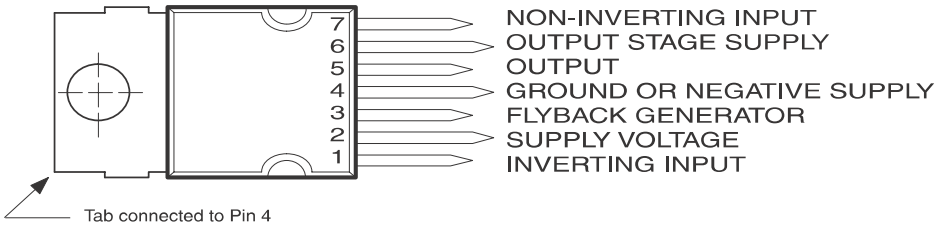

BLOCK DIAGRAM

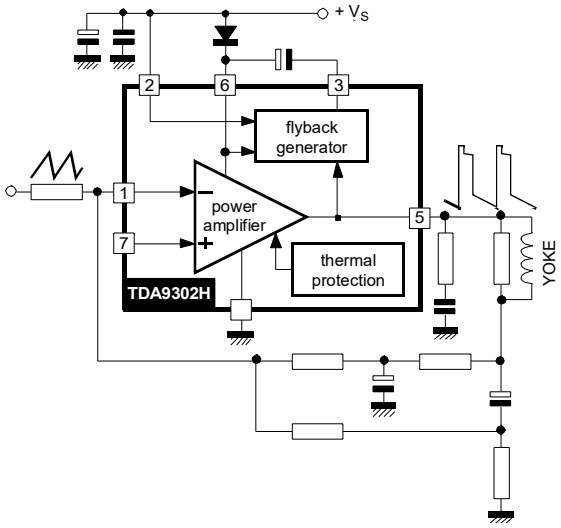

1 ABSOLUTE MAXIMUM RATINGS

Symbol	Parameter	Value	Unit
V_S	Supply Voltage (pin 2)	35	V
V_5, V_6	Flyback Peak Voltage	60	V
V_3	Voltage at Pin 3 (see Note 1)	V_S + 3	V
V_1, V_7	Amplifier Input Voltage	V_S - 0.5	V
I_0	Output Peak Current (non repetitive, t = 2ms)	1.8	A
I_0	Output Peak Current at f = 50 to 200 Hz, t ≤ 10µs	±4	A
I_0	Output Peak Current at f = 50 to 200 Hz, t > 10µs	1.5	A
I_3	Pin 3 DC Current at $V_5 < V_2$	100	mA
I_3	Pin 3 Flyback Current at f = 50 to 200 Hz, $t_{fly} \leq 1.5$ms	±1.5	A
I_3	Pin 3 Sink Current at f = 50 to 200 Hz, t ≤ 10µs	4	A
P_{tot}	Total Power Dissipation at T_{case} = 90 °C	20	W
T_{stg}, T_j	Storage and Junction Temperature	-40, +150	°C

Note 1: This occurs during the first part of flyback pulse

2 THERMAL DATA

Symbol	Parameter	Value	Unit
$R_{th(j-c)}$	Thermal Resistance Junction-case	3	°C/W

3 ELECTRICAL CHARACTERISTICS

(refer to the test circuits, V_S = 35V, T_{amb} = 25°C unless otherwise specified)

Symbol	Parameter	Test Conditions	Min.	Typ.	Max.	Unit	Fig.
I_2	Pin 2 Quiescent Current	I_3 = 0, I_5 = 0		8	16	mA	1
I_6	Pin 6 Quiescent Current	I_3 = 0, I_5 = 0		16	36	mA	1
I_1	Amplifier Input Bias Current	V_1 = 1 V, V_7 = 2 V		- 0.1	- 1	µA	1
		V_1 = 2 V, V_7 = 1 V		- 0.1	- 1	µA	1
V_{3L}	Pin 3 Saturation Voltage to GND	I_3 = 20 mA		1	1.5	V	3
V_5	Quiescent Output Voltage	V_S = 35V, R_a = 39 kΩ		18		V	4
V_{5L}	Output Saturation Voltage to GND	I_5 = 1 A		0.9	1.3	V	3
		I_5 = 0.7 A		0.7	1	V	3
V_{5H}	Output Saturation Voltage to Supply	- I_5 = 1 A		1.5	2	V	2
		- I_5 = 0.7 A		1.3	1.8	V	2
T_j	Junction Temperature for Thermal Shutdown			140		°C	

Figure 1. Measurement of I_1, I_2, I_6

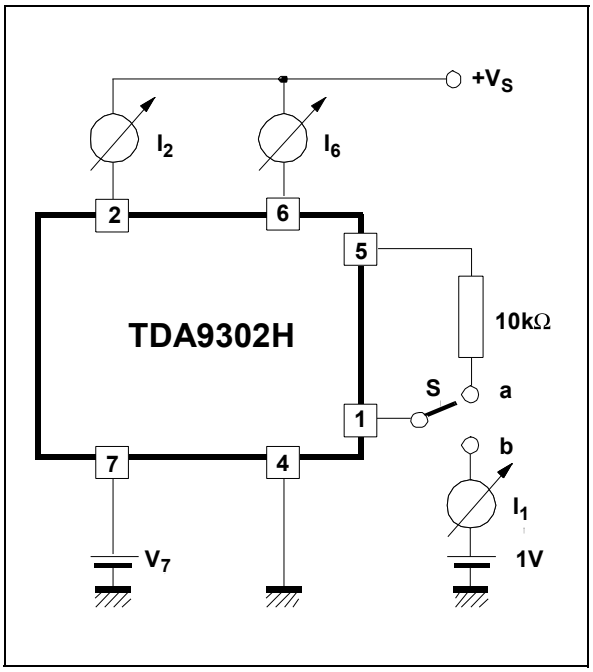

Figure 2. Measurement of V_{5H}

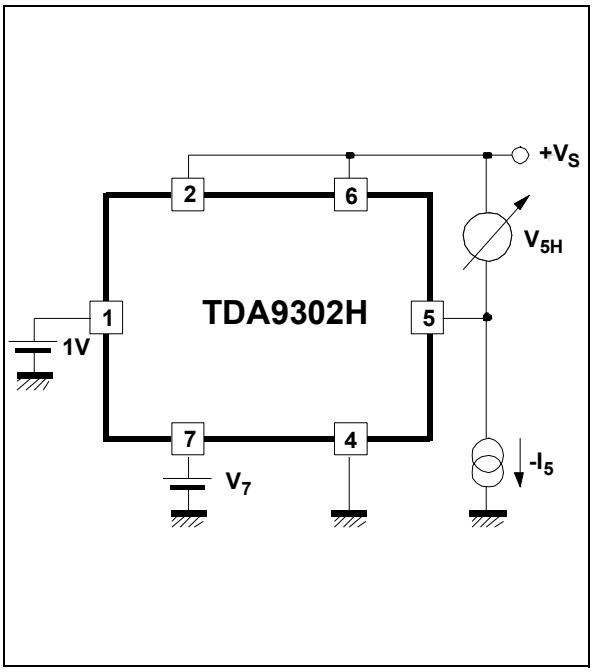

S1: (a) I2 and I6 ; (b) I1

Figure 3. Measurement of V_{3L}, V_{5L}

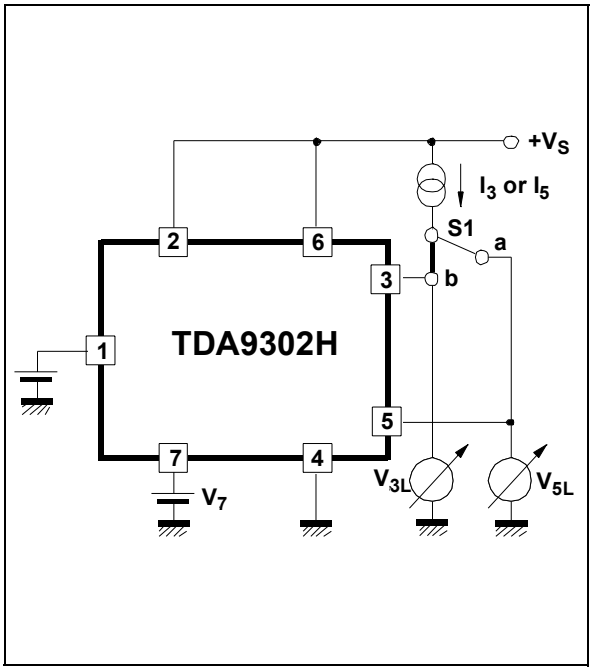

Figure 4. Measurement of V_5

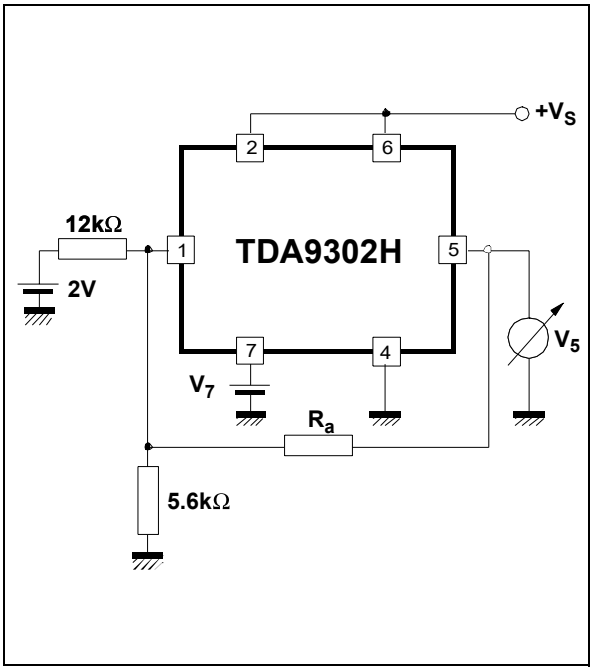

S: (a) V3L ; (b) V5L

Figure 5. AC test circuit

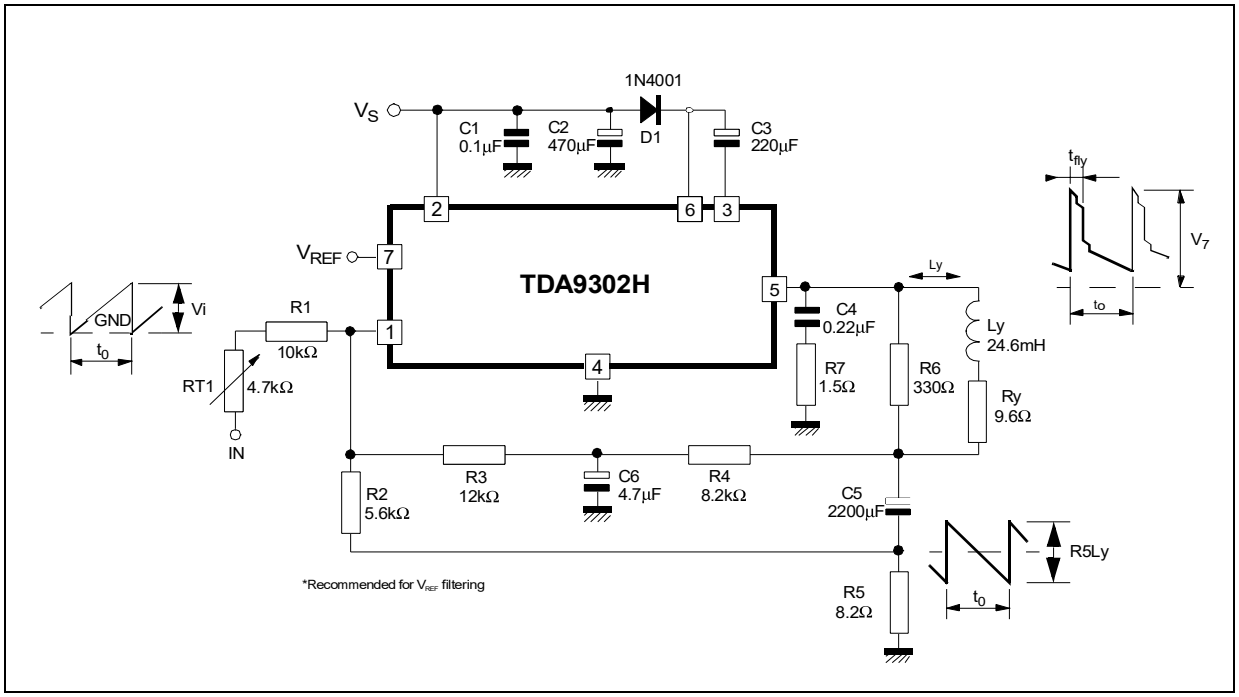

4 MOUNTING INSTRUCTIONS

The power dissipated in the circuit is removed by adding an external heatsink. With the HEPTAWATT™ package, the heatsink is simply attached with a screw or a compression spring (clip).

A layer of silicon grease inserted between heatsink and package optimizes thermal contact ; no electrical isolation is needed between the two surfaces since the tab is connected to Pin 4 which is ground.

Figure 6. Mounting examples

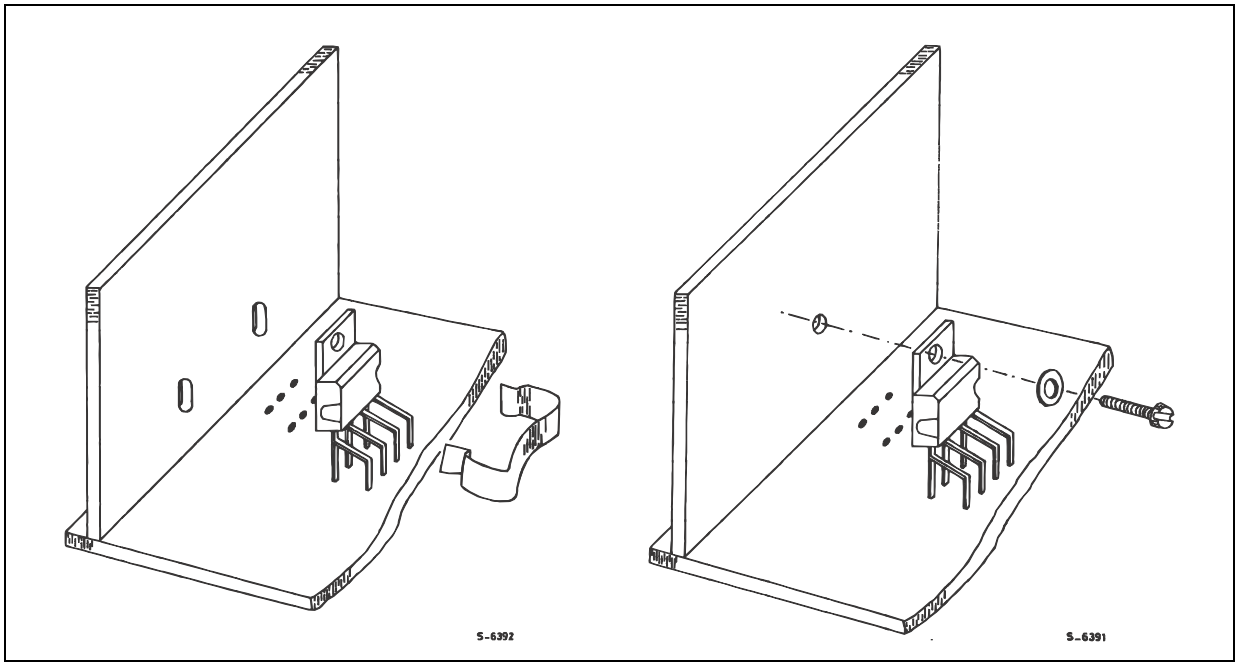

5 PACKAGE MECHANICAL DATA

9 PINS - plastic heptawatt

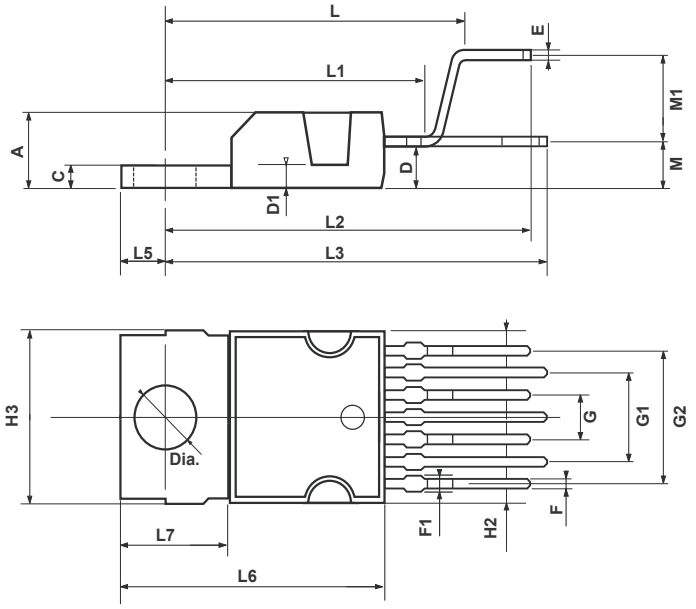

Dimensions	Millimeters			Inches		
	Min.	Typ.	Max.	Min.	Typ.	Max.
A			4.8			0.189
C			1.37			0.054
D	2.4		2.8	0.094		0.110
D1	1.2		1.35	0.047		0.053
E	0.35		0.55	0.014		0.022
F	0.6		0.8	0.024		0.031
F1			0.9			0.035
G	2.41	2.54	2.67	0.095	0.100	0.105
G1	4.91	5.08	5.21	0.193	0.200	0.205
G2	7.49	7.62	7.8	0.295	0.300	0.307
H2			10.4			0.409
H3	10.05		10.4	0.396		0.409
L		16.97			0.668	
L1		14.92			0.587	
L2		21.54			0.848	
L3		22.62			0.891	
L5	2.6		3	0.102		0.118
L6	15.1		15.8	0.594		0.622
L7	6		6.6	0.236		0.260
M		2.8			0.110	
M1		5.08			0.200	
Dia.	3.65		3.85	0.144		0.152

Information furnished is believed to be accurate and reliable. However, STMicroelectronics assumes no responsibility for the consequences of use of such information nor for any infringement of patents or other rights of third parties which may result from its use. No license is granted by implication or otherwise under any patent or patent rights of STMicroelectronics. Specifications mentioned in this publication are subject to change without notice. This publication supersedes and replaces all information previously supplied. STMicroelectronics products are not authorized for use as critical components in life support devices or systems without the express written approval of STMicroelectronics.

The ST logo is a registered trademark of STMicroelectronics

All other trademarks are the property of their respective companies.

© 2003 STMicroelectronics - All Rights Reserved

STMicroelectronics Group of Companies
Australia - Brazil - Canada - China - Finland - France - Germany - Hong Kong - India - Israel - Italy - Japan
Malaysia - Malta - Morocco - Singapore - Spain - Sweden - Switzerland - United Kingdom - U.S.A.

www.st.com