TPS54328 4.5-V to 18-V Input, 3-A Synchronous Step-Down Converter With Eco-Mode™

1 Features

- D-CAP2™ Mode Enables Fast Transient Response
- Low Output Ripple and Allows Ceramic Output Capacitor
- Wide Input Voltage Range: 4.5 V to 18 V
- Output Voltage Range: 0.76 V to 7 V
- Highly Efficient Integrated FETs Optimized for Lower Duty Cycle Applications
  - 100 mΩ (High-Side) and 70 mΩ (Low-Side)
- High Efficiency, Less Than 10 µA at Shutdown
- High Initial Bandgap Reference Accuracy
- Adjustable Soft Start
- Pre-Biased Soft Start
- 700-kHz Switching Frequency (f_{SW})
- Cycle-By-Cycle Overcurrent Limit
- Auto-Skip Eco-Mode™ for High Efficiency at Light Load

2 Applications

- Wide Range of Applications for Low Voltage Systems
  - Digital TV Power Supplies
  - High Definition Blu-ray Disc™ Players
  - Networking Home Terminals
  - Digital Set Top Boxes (STB)

3 Description

The TPS54328 is an adaptive on-time D-CAP2™ mode synchronous buck converter. The TPS54328 enables system designers to complete the suite of various end-equipment power bus regulators with a cost effective, low component count, low standby current solution. The main control loop for the TPS54328 uses the D-CAP2 mode control that provides a fast transient response with no external compensation components.

The adaptive on-time control supports seamless transition between PWM mode at higher load conditions and Eco-mode operation at light loads. Eco-mode allows the TPS54328 to maintain high efficiency during lighter load conditions. The TPS54328 also has a proprietary circuit that enables the device to adopt to both low equivalent series resistance (ESR) output capacitors, such as POSCAP or SP-CAP, and ultra-low ESR ceramic capacitors. The device operates from 4.5-V to 18-V input (V_{IN}).

The output voltage can be programmed from 0.76 V to 7 V. The device also features an adjustable soft start time. The TPS54328 is available in 8-pin DDA and 10-pin DRC packages, and is designed to operate over the ambient temperature range of –40°C to 85°C.

Device Information(1)

PART NUMBER	PACKAGE	BODY SIZE (NOM)
TPS54328	HSOP (8)	4.89 mm × 3.90 mm
	VSON (10)	3.00 mm × 3.00 mm

(1) For all available packages, see the orderable addendum at the end of the data sheet.

Simplified Schematic

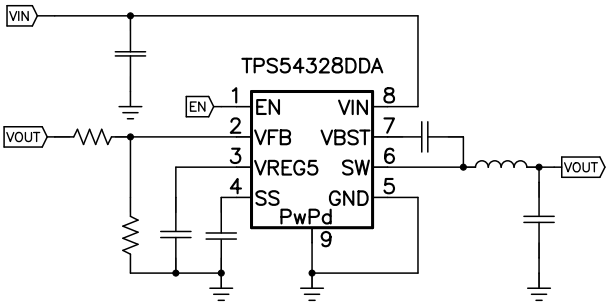

Copyright © 2016, Texas Instruments Incorporated

TPS54320 Transient Response

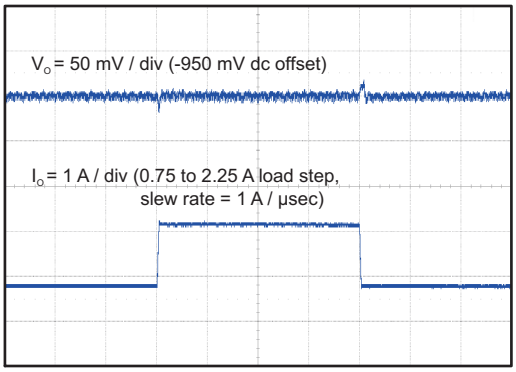

Time = 50 µsec / div

An IMPORTANT NOTICE at the end of this data sheet addresses availability, warranty, changes, use in safety-critical applications, intellectual property matters and other important disclaimers. PRODUCTION DATA.

Table of Contents

1 **Features** ... 1
2 **Applications** ... 1
3 **Description** ... 1
4 **Revision History** ... 2
5 **Pin Configuration and Functions** ... 3
6 **Specifications** ... 4
6.1 Absolute Maximum Ratings ... 4
6.2 ESD Ratings ... 4
6.3 Recommended Operating Conditions ... 4
6.4 Thermal Information ... 5
6.5 Electrical Characteristics ... 5
6.6 Typical Characteristics ... 6
7 **Detailed Description** ... 8
7.1 Overview ... 8
7.2 Functional Block Diagram ... 8
7.3 Feature Description ... 8
7.4 Device Functional Modes ... 10
8 **Application and Implementation** ... 11
8.1 Application Information ... 11
8.2 Typical Application ... 11
9 **Power Supply Recommendations** ... 15
10 **Layout** ... 15
10.1 Layout Guidelines ... 15
10.2 Layout Example ... 16
10.3 Thermal Considerations ... 17
11 **Device and Documentation Support** ... 18
11.1 Device Support ... 18
11.2 Documentation Support ... 18
11.3 Receiving Notification of Documentation Updates 18
11.4 Community Resources ... 18
11.5 Trademarks ... 18
11.6 Electrostatic Discharge Caution ... 18
11.7 Glossary ... 18
12 **Mechanical, Packaging, and Orderable Information** ... 18

4 Revision History

NOTE: Page numbers for previous revisions may differ from page numbers in the current version.

Changes from Revision C (November 2012) to Revision D	Page
• Added *ESD Ratings* table, *Feature Description* section, *Device Functional Modes*, *Application and Implementation* section, *Power Supply Recommendations* section, *Layout* section, *Device and Documentation Support* section, and *Mechanical, Packaging, and Orderable Information* section.	1
• Deleted *Ordering Information* table; see POA at the end of the data sheet	1
• Changed heartsick to heatsink in *Thermal Considerations* section	17

Changes from Revision B (April 2012) to Revision C	Page
• Changed the Description text to include the DRC package	1
• Added the DRC-10 pin Package to the ORDERING INFORMATION table	1
• Added Figure 17	16

Changes from Revision A (January 2012) to Revision B	Page
• Deleted Swift™ from the data sheet title	1
• Changed Figure 9 and Figure 10	13

Changes from Original (November 2010) to Revision A	Page
• Added condition to the TYPICAL CHARACTERISTICS title line, all pages	6
• Changed the Functional Block Diagram	8

Copyright © 2010–2016, Texas Instruments Incorporated

5 Pin Configuration and Functions

DDA Package
8-Pin HSOP
Top View

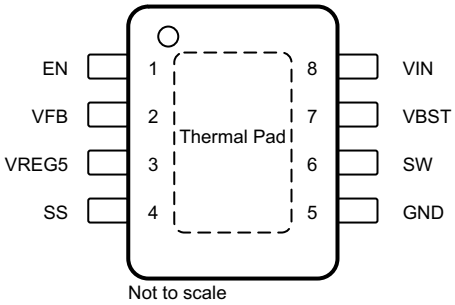

DRC Package
10-Pin VSON
Top View

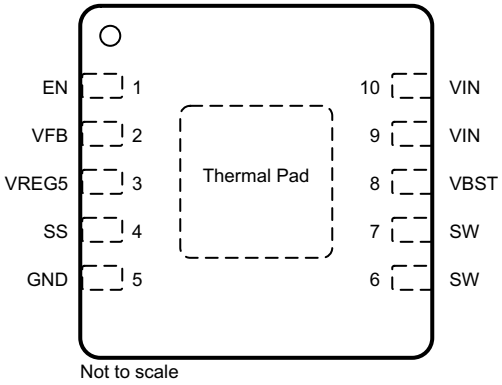

Pin Functions

PIN			I/O	DESCRIPTION
NAME	HSOP	VSON		
EN	1	1	I	Enable input control. Active high.
GND	5	—	—	Ground pin. Power ground return for switching circuit. Connect sensitive SS and VFB returns to GND at a single point.
	—	5	—	Ground pin. Connect sensitive SS and VFB returns to GND at a single point.
SS	4	4	I	Soft-start control. An external capacitor must be connected to GND.
SW	6	6, 7	O	Switch node connection between high-side NFET and low-side NFET.
VBST	7	8	I	Supply input for the high-side FET gate drive circuit. Connect 0.1-µF capacitor between VBST and SW pins. An internal diode is connected between VREG5 and VBST.
VFB	2	2	I	Converter feedback input. Connect to output voltage with feedback resistor divider.
VIN	8	9, 10	I	Input voltage supply pin.
VREG5	3	3	O	5.5-V power-supply output. A capacitor (typically 1 µF) must be connected to GND. VREG5 is not active when EN is low.
Exposed Thermal Pad	Back side	—	—	Thermal pad of the package. Must be soldered to achieve appropriate dissipation. Must be connected to GND.
	—	Back side	—	Thermal pad of the package. PGND power ground return of internal low-side FET. Must be soldered to achieve appropriate dissipation.

Copyright © 2010–2016, Texas Instruments Incorporated

6 Specifications

6.1 Absolute Maximum Ratings

over operating free-air temperature range (unless otherwise noted)[1]

		MIN	MAX	UNIT
Input voltage	VIN, EN	–0.3	20	V
	VBST	–0.3	26	
	VBST (10 ns transient)	–0.3	28	
	VBST (vs SW)	–0.3	6.5	
	VFB, SS	–0.3	6.5	
	SW	–2	20	
	SW (10-ns transient)	–3	22	
Output voltage	VREG5	–0.3	6.5	V
	GND	–0.3	0.3	
Voltage from GND to thermal pad, V_{diff}		–0.2	0.2	V
Operating junction temperature, T_J		–40	150	°C
Storage temperature, T_{stg}		–55	150	°C

(1) Stresses beyond those listed under *Absolute Maximum Ratings* may cause permanent damage to the device. These are stress ratings only, which do not imply functional operation of the device at these or any other conditions beyond those indicated under *Recommended Operating Conditions*. Exposure to absolute-maximum-rated conditions for extended periods may affect device reliability.

6.2 ESD Ratings

			VALUE	UNIT
$V_{(ESD)}$	Electrostatic discharge	Human-body model (HBM), per ANSI/ESDA/JEDEC JS-001[1]	±2000	V
		Charged-device model (CDM), per JEDEC specification JESD22-C101[2]	±500	

(1) JEDEC document JEP155 states that 500-V HBM allows safe manufacturing with a standard ESD control process.
(2) JEDEC document JEP157 states that 250-V CDM allows safe manufacturing with a standard ESD control process.

6.3 Recommended Operating Conditions

over operating free-air temperature range (unless otherwise noted)

			MIN	MAX	UNIT
V_{IN}	Supply input voltage		4.5	18	V
	Input voltage	VBST	–0.1	24	V
		VBST (10-ns transient)	–0.1	27	
		VBST(vs SW)	–0.1	5.7	
		SS	–0.1	5.7	
		EN	–0.1	18	
		VFB	–0.1	5.5	
		SW	–1.8	18	
		SW (10-ns transient)	–3	21	
		GND	–0.1	0.1	
V_{OUT}	Output voltage	VREG5	–0.1	5.7	V
I_{OUT}	Output current	I_{VREG5}	0	10	mA
T_A	Operating free-air temperature		–40	85	°C
T_J	Operating junction temperature		–40	150	°C

Copyright © 2010–2016, Texas Instruments Incorporated

6.4 Thermal Information

THERMAL METRIC[1]		TPS54328		UNIT
		DDA (HSOP)	DRC (VSON)	
		8 PINS	10 PINS	
$R_{\theta JA}$	Junction-to-ambient thermal resistance	42.1	43.9	°C/W
$R_{\theta JC(top)}$	Junction-to-case (top) thermal resistance	50.9	55.4	°C/W
$R_{\theta JB}$	Junction-to-board thermal resistance	31.8	18.9	°C/W
ψ_{JT}	Junction-to-top characterization parameter	5	0.7	°C/W
ψ_{JB}	Junction-to-board characterization parameter	13.5	19.1	°C/W
$R_{\theta JC(bot)}$	Junction-to-case (bottom) thermal resistance	7.1	5.3	°C/W

(1) For more information about traditional and new thermal metrics, see the *Semiconductor and IC Package Thermal Metrics* application report.

6.5 Electrical Characteristics

over operating free-air temperature range, V_{IN} = 12 V (unless otherwise noted)

PARAMETER		TEST CONDITIONS	MIN	TYP	MAX	UNIT
SUPPLY CURRENT						
I_{VIN}	Operating non-switching supply current	VIN current, T_A = 25°C, EN = 5 V, V_{FB} = 0.8 V		800	1200	µA
I_{VINSDN}	Shutdown supply current	VIN current, T_A = 25°C, EN = 0 V		1.8	10	µA
LOGIC THRESHOLD						
V_{ENH}	EN high-level input voltage	EN	1.6			V
V_{ENL}	EN low-level input voltage	EN			0.45	V
V_{FB} VOLTAGE AND DISCHARGE RESISTANCE						
V_{FBTH}	VFB threshold voltage	T_A = 25°C, V_{OUT} = 1.05 V, I_{OUT} = 10 mA, Eco-mode operation		772		mV
		T_A = 25°C, V_{OUT} = 1.05 V, continuous mode operation	749	765	781	mV
I_{VFB}	VFB input current	V_{FB} = 0.8 V, T_A = 25°C		0	±0.1	µA
VREG5 OUTPUT						
V_{VREG5}	VREG5 output voltage	T_A = 25°C, 6 V < V_{IN} < 18 V, 0 < I_{VREG5} < 5 mA	5.2	5.5	5.7	V
V_{LN5}	Line regulation	6 V < V_{IN} < 18 V, I_{VREG5} = 5 mA			25	mV
V_{LD5}	Load regulation	0 mA < I_{VREG5} < 5 mA			100	mV
I_{VREG5}	Output current	V_{IN} = 6 V, V_{VREG5} = 4 V, T_A = 25°C		60		mA
MOSFET						
$R_{DS(ON)H}$	High-side switch resistance	T_A = 25°C, V_{BST} – SW = 5.5 V		100		mΩ
$R_{DS(ON)L}$	Low-side switch resistance	T_A = 25°C		70		mΩ
CURRENT LIMIT						
I_{OCL}	Current limit	L_{OUT} = 1.5 µH[1], T_A = –20ºC to 85ºC	3.5	4.2	5.7	A
THERMAL SHUTDOWN						
T_{SDN}	Thermal shutdown threshold	Shutdown temperature [1]		165		°C
		Hysteresis [1]		30		
ON-TIME TIMER CONTROL						
t_{ON}	ON time	V_{IN} = 12 V, V_{OUT} = 1.05 V		150		ns
$t_{OFF(MIN)}$	Minimum off time	T_A = 25°C, V_{FB} = 0.7 V		260	310	ns
SOFT START						
I_{SSC}	SS charge current	V_{SS} = 0 V	1.4	2	2.6	µA
I_{SSD}	SS discharge current	V_{SS} = 0.5 V	0.05	0.1		mA

(1) Not production tested.

Copyright © 2010–2016, Texas Instruments Incorporated

Electrical Characteristics (continued)

over operating free-air temperature range, V_{IN} = 12 V (unless otherwise noted)

PARAMETER		TEST CONDITIONS	MIN	TYP	MAX	UNIT
UVLO						
UVLO	UVLO threshold	Wake up VREG5 voltage	3.45	3.75	4.05	V
		Hysteresis VREG5 voltage	0.17	0.32	0.45	

6.6 Typical Characteristics

V_{IN} = 12 V, T_A = 25°C (unless otherwise noted).

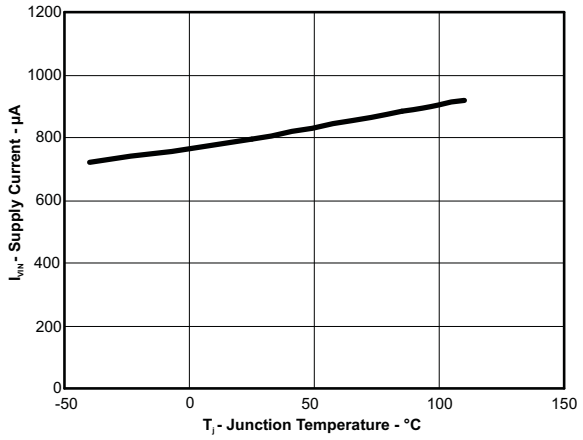

Figure 1. VIN Current vs Junction Temperature

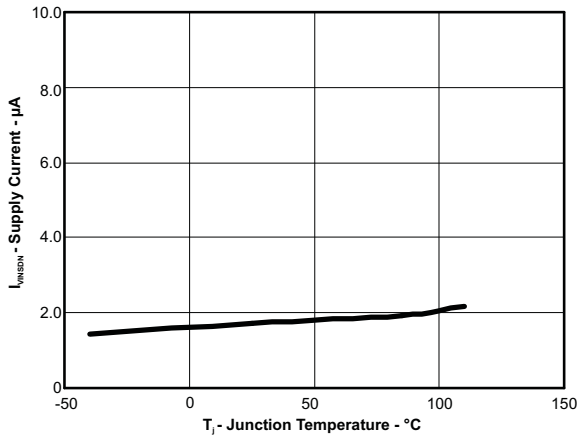

Figure 2. VIN Shutdown Current vs Junction Temperature

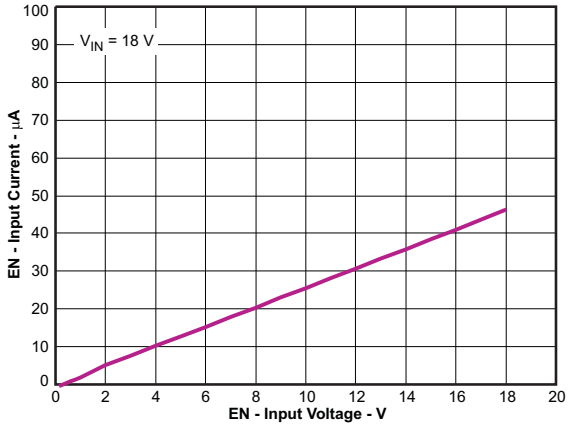

Figure 3. EN Current vs EN Voltage

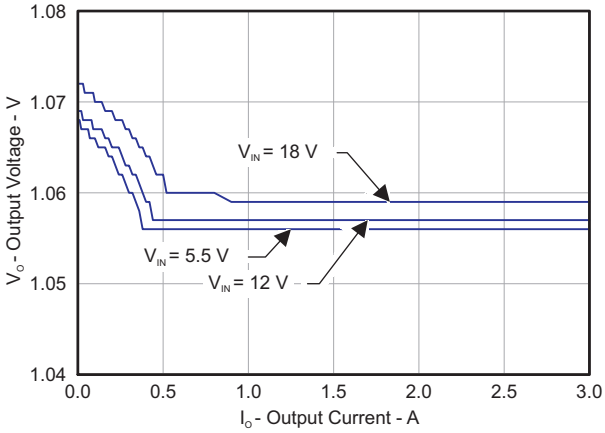

Figure 4. 1.05-V Output Voltage vs Output Current

Copyright © 2010–2016, Texas Instruments Incorporated

Typical Characteristics (continued)

V_{IN} = 12 V, T_A = 25°C (unless otherwise noted).

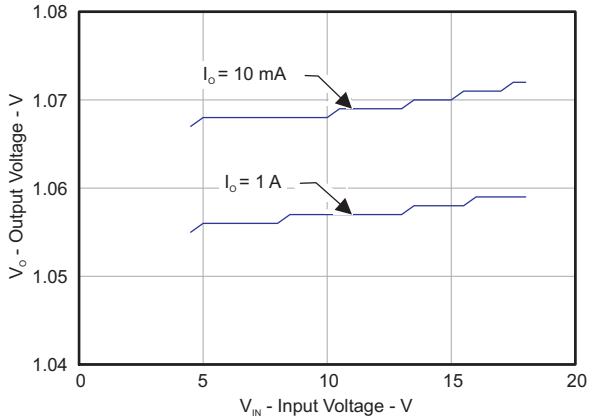

Figure 5. 1.05-V Output Voltage vs Input Voltage

7 Detailed Description

7.1 Overview

The TPS54328 is a 3-A, synchronous, step-down (buck) converter with two integrated N-channel MOSFETs. It operates using D-CAP2 mode control. The fast transient response of D-CAP2 control reduces the output capacitance required to meet a specific level of performance. Proprietary internal circuitry allows the use of low-ESR output capacitors including ceramic and special polymer types.

7.2 Functional Block Diagram

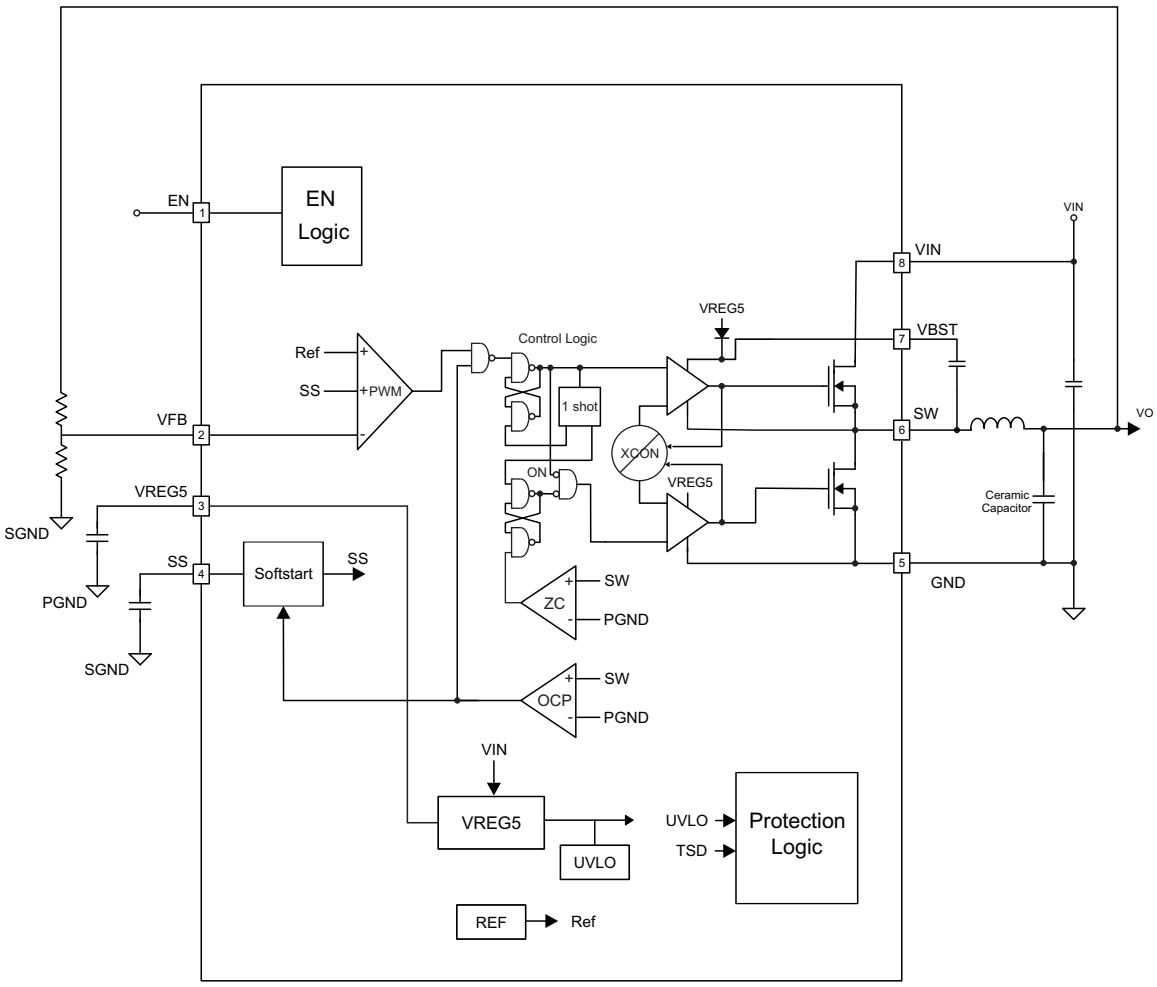

Copyright © 2016, Texas Instruments Incorporated

7.3 Feature Description

7.3.1 PWM Operation

The main control loop of the TPS54328 is an adaptive on-time pulse width modulation (PWM) controller that supports a proprietary D-CAP2 mode control. D-CAP2 mode control combines constant on-time control with an internal compensation circuit for pseudo-fixed frequency and low external component count configuration with both low ESR and ceramic output capacitors. It is stable even with virtually no ripple at the output.

Copyright © 2010–2016, Texas Instruments Incorporated

Feature Description (continued)

At the beginning of each cycle, the high-side MOSFET is turned on. This MOSFET is turned off after internal one shot timer expires. This one shot is set by the converter input voltage (V_{IN}) and the output voltage (V_{OUT}) to maintain a pseudo-fixed frequency over the input voltage range, hence it is called adaptive on-time control. The one-shot timer is reset and the high-side MOSFET is turned on again when the feedback voltage falls below the reference voltage. An internal ramp is added to reference voltage to simulate output ripple, eliminating the need for ESR induced output ripple from D-CAP2 mode control.

7.3.2 PWM Frequency and Adaptive On-Time Control

TPS54328 uses an adaptive on-time control scheme and does not have a dedicated onboard oscillator. The TPS54328 runs with a pseudo-constant frequency of 700 kHz by using the input voltage and output voltage to set the on-time one-shot timer. The on-time is inversely proportional to the input voltage and proportional to the output voltage, therefore, when the duty ratio is V_{OUT} / V_{IN}, the frequency is constant.

7.3.3 Auto-Skip Eco-Mode Control

The TPS54328 is designed with Auto-Skip Eco-Mode to increase light load efficiency. As the output current decreases from heavy load condition, the inductor current is also reduced and eventually comes to point that its rippled valley touches zero level, which is the boundary between continuous conduction and discontinuous conduction modes. The rectifying MOSFET is turned off when its zero inductor current is detected. As the load current further decreases the converter run into discontinuous conduction mode. The on-time is kept almost the same as is was in the continuous conduction mode so that it takes longer time to discharge the output capacitor with smaller load current to the level of the reference voltage. The transition point to the light load operation $I_{OUT(LL)}$ current can be calculated in Equation 1.

$$I_{OUT(LL)} = \frac{1}{2 \cdot L \cdot fsw} = \frac{(V_{IN} - V_{OUT}) \cdot V_{OUT}}{V_{IN}} \tag{1}$$

7.3.4 Soft Start and Pre-Biased Soft Start

The soft start function is adjustable. When the EN pin becomes high, 2-µA current begins charging the capacitor which is connected from the SS pin to GND. Smooth control of the output voltage is maintained during start up. The equation for the slow start time is shown in Equation 2. VFB voltage is 0.765 V and SS pin source current is 2 µA.

$$t_{SS}(ms) = \frac{C6(nF) \times V_{REF} \times 1.1}{I_{SS}(\mu A)} = \frac{C6(nF) \times 0.765 \times 1.1}{2} \tag{2}$$

The TPS54328 contains a unique circuit to prevent current from being pulled from the output during startup if the output is pre-biased. When the soft-start commands a voltage higher than the pre-bias level (internal soft start becomes greater than feedback voltage V_{FB}), the controller slowly activates synchronous rectification by starting the first low side FET gate driver pulses with a narrow on-time. It then increments that on-time on a cycle-by-cycle basis until it coincides with the time dictated by (1-D), where D is the duty cycle of the converter. This scheme prevents the initial sinking of the pre-bias output, and ensure that V_{OUT} starts and ramps up smoothly into regulation and the control loop is given time to transition from pre-biased start-up to normal mode operation.

7.3.5 Current Protection

The output over-current protection (OCP) is implemented using a cycle-by-cycle valley detect control circuit. The switch current is monitored by measuring the low-side FET switch voltage between the SW pin and GND. This voltage is proportional to the switch current. To improve accuracy, the voltage sensing is temperature compensated.

During the on time of the high-side FET switch, the switch current increases at a linear rate determined by V_{IN}, V_{OUT}, the on-time, and the output inductor value. During the on time of the low-side FET switch, this current decreases linearly. The average value of the switch current is the load current I_{OUT}. The TPS54328 constantly monitors the low-side FET switch voltage, which is proportional to the switch current, during the low-side on-time. If the measured voltage is above the voltage proportional to the current limit, an internal counter is incremented per each SW cycle and the converter maintains the low-side switch on until the measured voltage is below the voltage corresponding to the current limit at which time the switching cycle is terminated and a new switching

Copyright © 2010–2016, Texas Instruments Incorporated

Feature Description (continued)

cycle begins. In subsequent switching cycles, the on-time is set to a fixed value and the current is monitored in the same manner. If the over current condition exists for 7 consecutive switching cycles, the internal OCL threshold is set to a lower level, reducing the available output current. When a switching cycle occurs where the switch current is not above the lower OCL threshold, the counter is reset and the OCL limit is returned to the higher value.

There are some important considerations for this type of over-current protection. The load current one half of the peak-to-peak inductor current higher than the over-current threshold. Also when the current is being limited, the output voltage tends to fall as the demanded load current may be higher than the current available from the converter. This may cause the output voltage to fall. When the over current condition is removed, the output voltage returns to the regulated value. This protection is non-latching.

7.3.6 UVLO Protection

Undervoltage lock out protection (UVLO) monitors the voltage of the VREG5 pin. When the VREG5 voltage is lower than UVLO threshold voltage, the TPS54328 is shut off. This protection is non-latching.

7.3.7 Thermal Shutdown

TPS54328 monitors the temperature of itself. If the temperature exceeds the threshold value (typically 165°C), the device is shut off. This is non-latch protection.

7.4 Device Functional Modes

7.4.1 Normal Operation

When the input voltage is above the UVLO threshold and the EN voltage is above the enable threshold, the TPS54328 can operate in the normal switching modes. Normal continuous conduction mode (CCM) occurs when the minimum switch current is above 0 A. In CCM, the TPS54328 operates at a quasi-fixed frequency of 700 kHz.

7.4.2 Standby Operation

When the device is operating in either normal CCM or forced CCM, it may be placed in standby operation mode by asserting the EN pin low.

Copyright © 2010–2016, Texas Instruments Incorporated

8 Application and Implementation

NOTE

Information in the following applications sections is not part of the TI component specification, and TI does not warrant its accuracy or completeness. TI's customers are responsible for determining suitability of components for their purposes. Customers should validate and test their design implementation to confirm system functionality.

8.1 Application Information

The TPS54328 is typically used as step down converters, which convert a voltage from 4.5 V to 18 V to a lower voltage. WEBENCH® software is available to aid in the design and analysis of circuits.

8.2 Typical Application

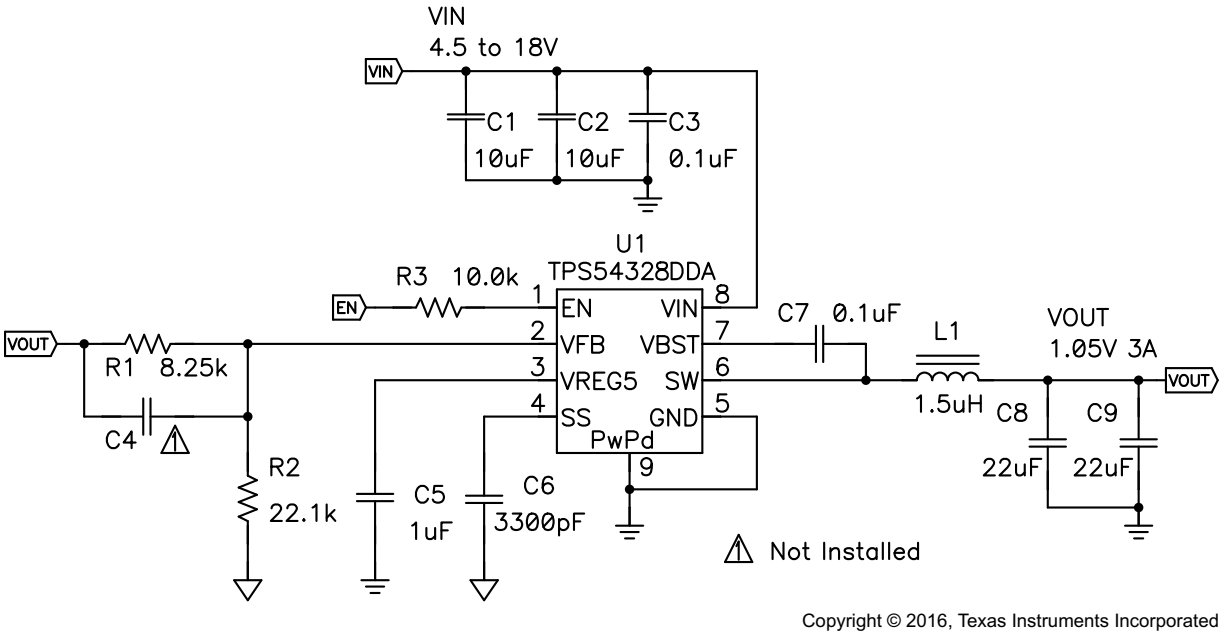

Figure 6. Schematic Diagram

8.2.1 Design Requirements

For this design example, use the parameters listed in Table 1 as the input parameters.

Table 1. Design Parameters

PARAMETER	EXAMPLE VALUE
Input voltage	4.5 V to 18 V
Output voltage	1.05 V
Output current	3 A
Output voltage ripple	50 mV_{PP}

8.2.2 Detailed Design Procedure

To begin the design process, you must know a few application parameters:

- Input voltage range
- Output voltage
- Output current
- Output voltage ripple

- Input voltage ripple

8.2.2.1 Output Voltage Resistors Selection

The output voltage is set with a resistor divider from the output node to the VFB pin. TI recommends using 1% tolerance or better divider resistors. Start by using Equation 3 to calculate V_{OUT}.

To improve efficiency at very light loads consider using larger value resistors, too high of resistance is more susceptible to noise and voltage errors from the VFB input current is more noticeable.

$$V_{OUT} = 0.765 \times \left(1 + \frac{R1}{R2}\right) \tag{3}$$

8.2.2.2 Output Filter Selection

The output filter used with the TPS54328 is an LC circuit. This LC filter has a double pole at:

$$F_P = \frac{1}{2\pi\sqrt{L_{OUT} \times C_{OUT}}} \tag{4}$$

At low frequencies, the overall loop gain is set by the output set-point resistor divider network and the internal gain of the TPS54328. The low frequency phase is 180 degrees. At the output filter pole frequency, the gain rolls off at a –40 dB per decade rate and the phase drops rapidly. D-CAP2 introduces a high-frequency zero that reduces the gain roll off to –20 dB per decade and increases the phase to 90 degrees one decade above the zero frequency. The inductor and capacitor selected for the output filter must be selected so that the double pole of Equation 4 is located below the high frequency zero but close enough that the phase boost provided be the high frequency zero provides adequate phase margin for a stable circuit. To meet this requirement use the values in Table 2.

Table 2. Recommended Component Values

OUTPUT VOLTAGE (V)	R1 (kΩ)	R2 (kΩ)	C4 (pF)	L1 (µH)	C8 + C9 (µF)
1	6.81	22.1	—	1.5	22 – 68
1.05	8.25	22.1	—	1.5	22 – 68
1.2	12.7	22.1	—	1.5	22 – 68
1.8	30.1	22.1	5 - 22	2.2	22 – 68
2.5	49.9	22.1	5 - 22	2.2	22 – 68
3.3	73.2	22.1	5 - 22	2.2	22 – 68
5	124	22.1	5 - 22	3.3	22 – 68
6.5	165	22.1	5 - 22	3.3	22 – 68

Because the DC gain is dependent on the output voltage, the required inductor value increases as the output voltage increases. For higher output voltages at or above 1.8 V, additional phase boost can be achieved by adding a feed forward capacitor (C4) in parallel with R1

The inductor peak-to-peak ripple current, peak current and RMS current are calculated using Equation 5, Equation 6 and Equation 7. The inductor saturation current rating must be greater than the calculated peak current and the RMS or heating current rating must be greater than the calculated RMS current. Use 700 kHz for f_{SW}.

Use 700 kHz for f_{SW}. Make sure the chosen inductor is rated for the peak current of Equation 6 and the RMS current of Equation 7.

$$I_{IPP} = \frac{V_{OUT}}{V_{IN(max)}} \times \frac{V_{IN(max)} - V_{OUT}}{L_O \times f_{SW}} \tag{5}$$

$$I_{Ipeak} = I_O + \frac{I_{Ipp}}{2} \tag{6}$$

$$I_{Lo(RMS)} = \sqrt{I_O^2 + \frac{1}{12} I_{IPP}^2} \tag{7}$$

Copyright © 2010–2016, Texas Instruments Incorporated

For this design example, the calculated peak current is 3.49 A and the calculated RMS current is 3.01 A. The inductor used is a TDK SPM6530-1R5M100 with a peak current rating of 11.5 A and an RMS current rating of 11 A.

The capacitor value and ESR determines the amount of output voltage ripple. The TPS54328 is intended for use with ceramic or other low ESR capacitors. Recommended values range from 22 µF to 68 µF. Use Equation 8 to determine the required RMS current rating for the output capacitor.

$$I_{Co(RMS)} = \frac{V_{OUT} \times (V_{IN} - V_{OUT})}{\sqrt{12} \times V_{IN} \times L_O \times f_{SW}} \tag{8}$$

For this design two TDK C3216X5R0J226M 22µF output capacitors are used. The typical ESR is 2 mΩ each. The calculated RMS current is 0.271 A and each output capacitor is rated for 4 A.

8.2.2.3 Input Capacitor Selection

The TPS54328 requires an input decoupling capacitor and a bulk capacitor is required depending on the application. TI recommends a ceramic capacitor over 10 µF for the decoupling capacitor. TI recommends an additional 0.1-µF capacitor from VIN to ground to improve the stability of the over-current limit function. The capacitor voltage rating requires to be greater than the maximum input voltage.

8.2.2.4 Bootstrap Capacitor Selection

A 0.1-µF ceramic capacitor must be connected between the VBST and SW pin for proper operation. TI recommends using a ceramic capacitor.

8.2.2.5 VREG5 Capacitor Selection

A 1-µF ceramic capacitor must be connected between the VREG5 and GND pins for proper operation. TI recommends using a ceramic capacitor.

8.2.3 Application Curves

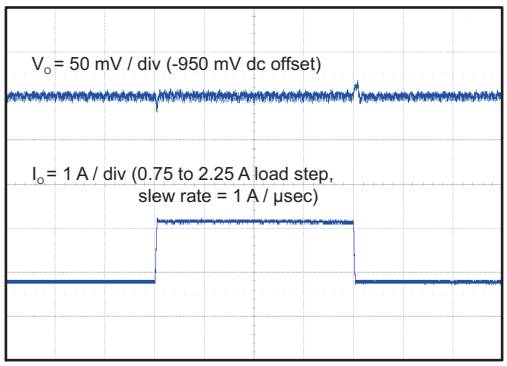

Figure 7. 1.05 V, Load Transient Response

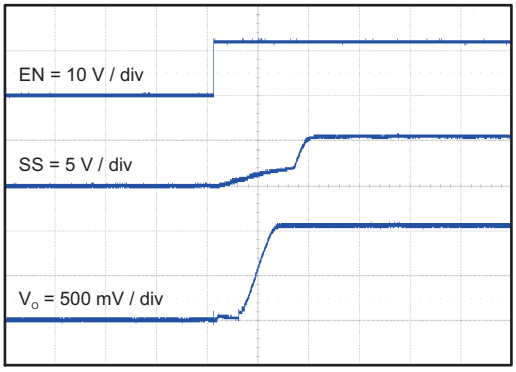

Figure 8. Start-up Waveform

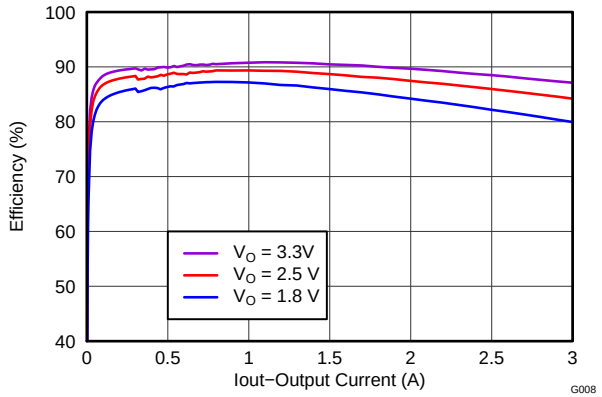

Figure 9. Efficiency vs Output Current

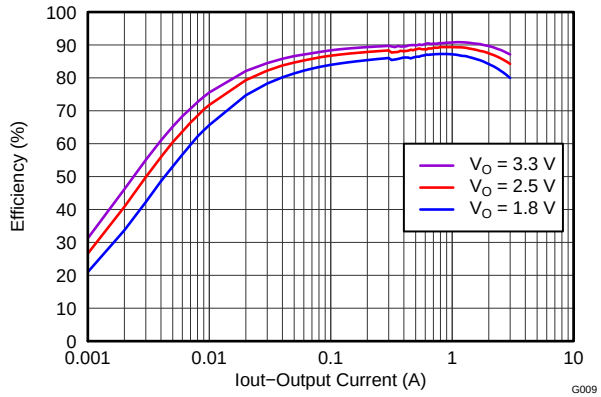

Figure 10. Light Load Efficiency vs Output Current

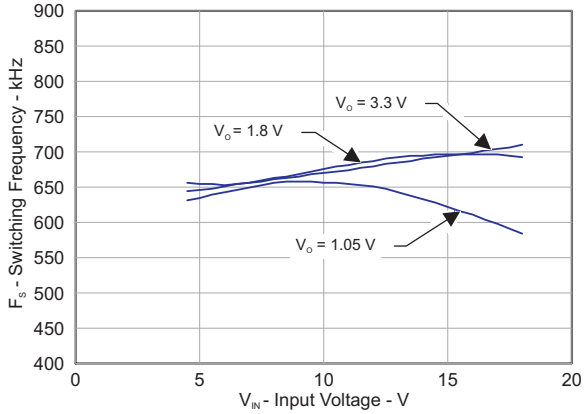

Figure 11. Switching Frequency vs Input Voltage

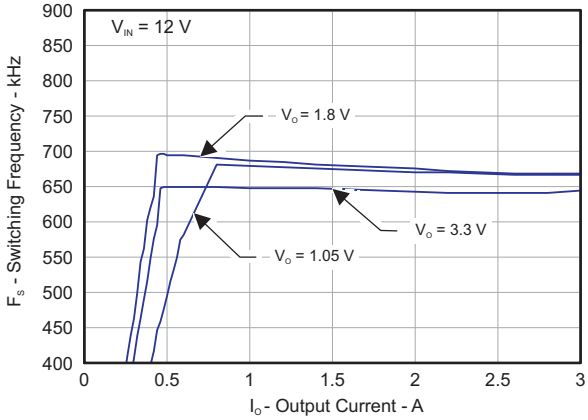

Figure 12. Switching Frequency vs Output Current

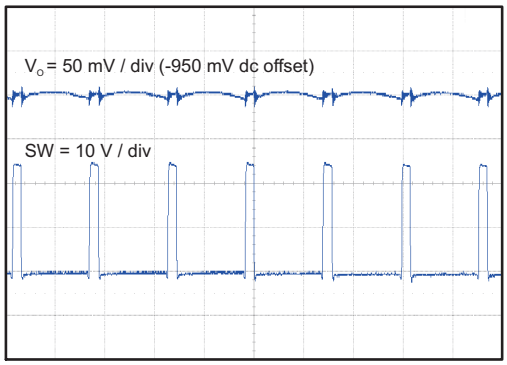

Time = 1 µsec / div

I_{OUT} = 3 A

Figure 13. Voltage Ripple at Output

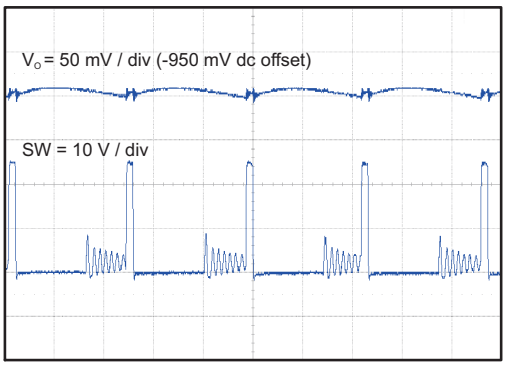

Time = 1 µsec / div

I_{OUT} = 30 mA

Figure 14. DCM Voltage Ripple at Output

Copyright © 2010–2016, Texas Instruments Incorporated

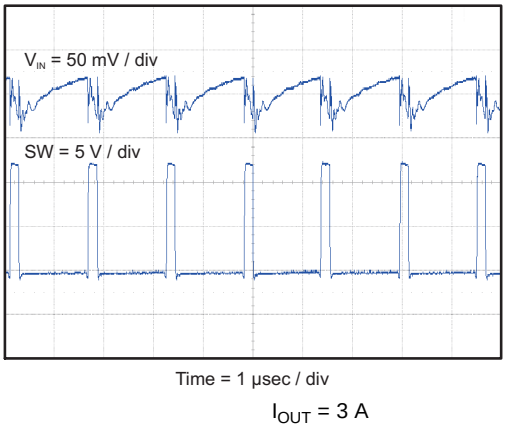

Figure 15. Voltage Ripple at Input

9 Power Supply Recommendations

The TPS54328 is designed to operate from input supply voltage of 4.5 V to 18 V. Buck converters require the input voltage to be higher than the output voltage for proper operation. The maximum recommended operating duty cycle is 65%. Using that criteria, the minimum recommended input voltage is V_{OUT} / 0.65.

10 Layout

10.1 Layout Guidelines

- Keep the input switching current loop as small as possible.
- Keep the SW node as physically small and short as possible to minimize parasitic capacitance and inductance and to minimize radiated emissions. Kelvin connections must be brought from the output to the feedback pin of the device.
- Keep analog and non-switching components away from switching components.
- Make a single point connection from the signal ground to power ground.
- Do not allow switching current to flow under the device.
- Keep the pattern lines for VIN and PGND broad.
- Exposed pad of device must be connected to PGND with solder.
- VREG5 capacitor must be placed near the device, and connected PGND.
- Output capacitor must be connected to a broad pattern of the PGND.
- Voltage feedback loop must be as short as possible, and preferably with ground shield.
- Lower resistor of the voltage divider which is connected to the VFB pin must be tied to SGND.
- Providing sufficient vias is preferable for VIN, SW and PGND connection.
- PCB pattern for VIN, SW, and PGND must be as broad as possible.
- VIN capacitor must be placed as near as possible to the device.

Copyright © 2010–2016, Texas Instruments Incorporated

10.2 Layout Example

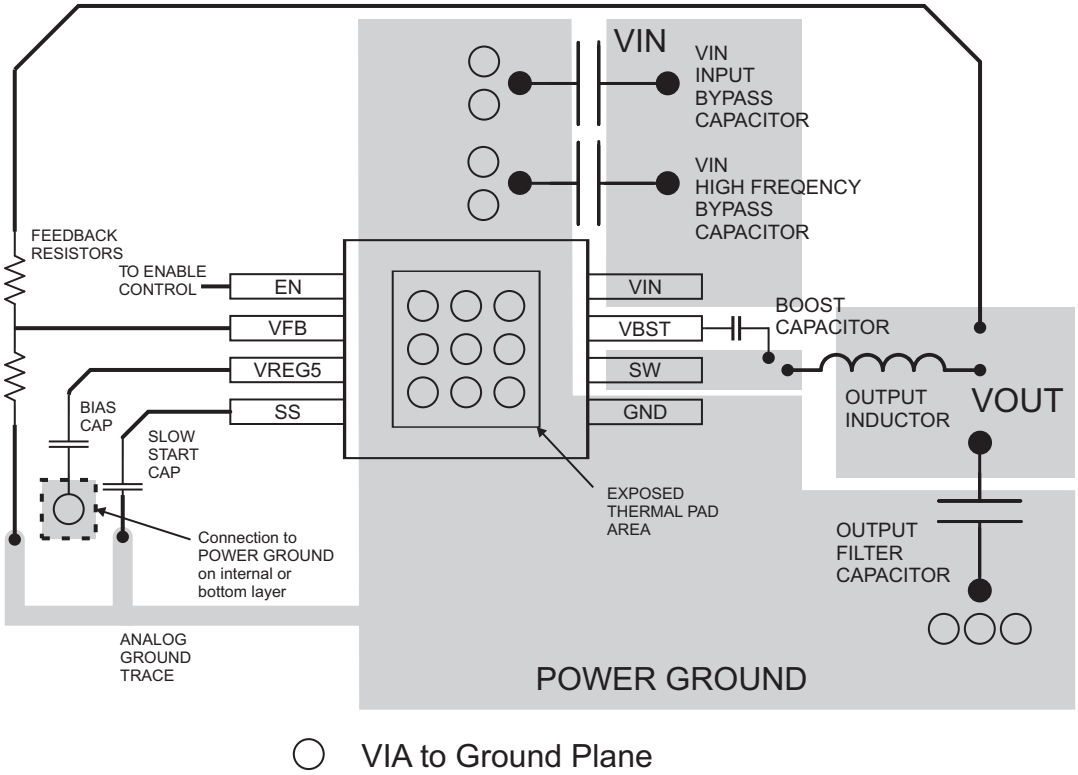

Figure 16. PCB Layout

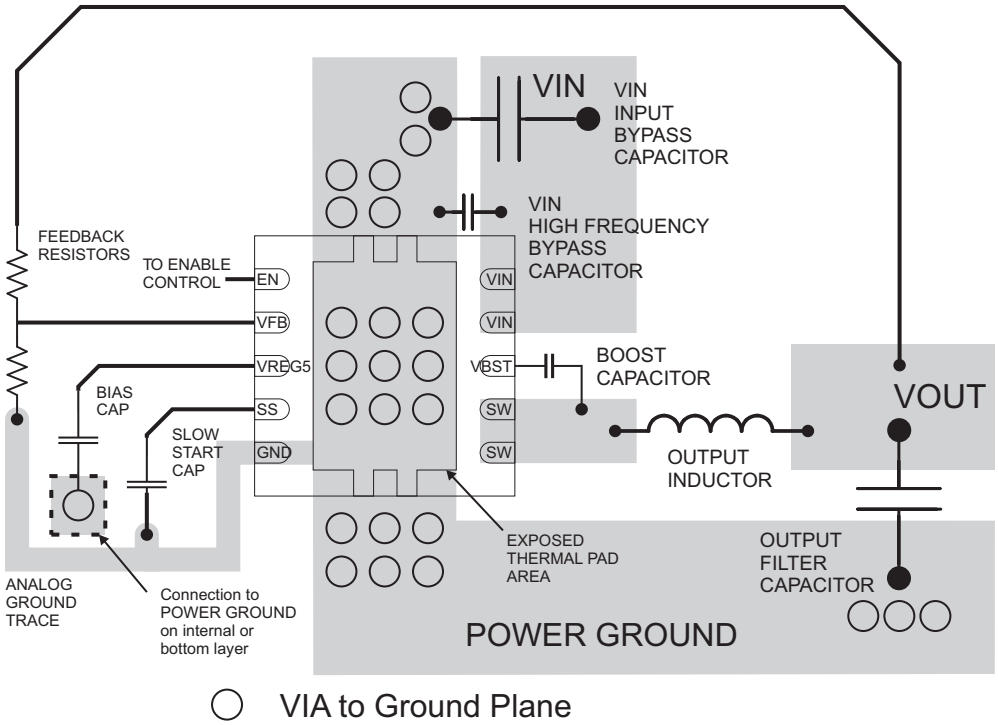

Figure 17. PCB Layout for the DRC Package

Copyright © 2010–2016, Texas Instruments Incorporated

10.3 Thermal Considerations

This 8-pin DDA package incorporates an exposed thermal pad that is designed to be directly to an external heat sink. The thermal pad must be soldered directly to the printed board (PCB). After soldering, the PCB can be used as a heat sink. In addition, through the use of thermal vias, the thermal pad can be attached directly to the appropriate copper plane shown in the electrical schematic for the device, or alternatively, can be attached to a special heat sink structure designed into the PCB. This design optimizes the heat transfer from the integrated circuit (IC).

For additional information on the exposed thermal pad and how to use the advantage of its heat dissipating abilities, see *PowerPAD™ Thermally Enhanced Package* and *PowerPAD™ Made Easy*.

The exposed thermal pad dimensions for this package are shown in Figure 18.

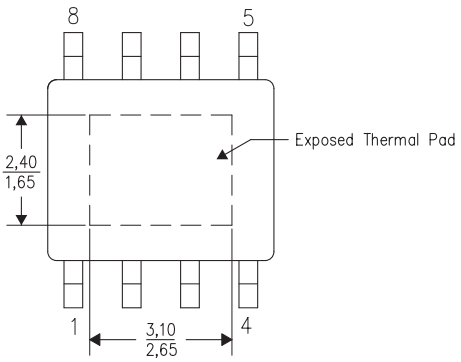

Figure 18. Thermal Pad Dimensions

11 Device and Documentation Support

11.1 Device Support

11.1.1 Development Support

For the WEBENCH Tools, go to http://www.ti.com/lsds/ti/analog/webench/overview.page

11.2 Documentation Support

11.2.1 Related Documentation

For related documentation see the following:

- *PowerPAD™ Thermally Enhanced Package* (SLMA002)
- *PowerPAD™ Made Easy* (SLMA004)

11.3 Receiving Notification of Documentation Updates

To receive notification of documentation updates, navigate to the device product folder on ti.com. In the upper right corner, click on *Alert me* to register and receive a weekly digest of any product information that has changed. For change details, review the revision history included in any revised document.

11.4 Community Resources

The following links connect to TI community resources. Linked contents are provided "AS IS" by the respective contributors. They do not constitute TI specifications and do not necessarily reflect TI's views; see TI's Terms of Use.

TI E2E™ Online Community ***TI's Engineer-to-Engineer (E2E) Community.*** Created to foster collaboration among engineers. At e2e.ti.com, you can ask questions, share knowledge, explore ideas and help solve problems with fellow engineers.

Design Support ***TI's Design Support*** Quickly find helpful E2E forums along with design support tools and contact information for technical support.

11.5 Trademarks

D-CAP2, Eco-Mode, E2E are trademarks of Texas Instruments.
WEBENCH is a registered trademark of Texas Instruments.
Blu-ray Disc is a trademark of Blu-ray Disc Association.
All other trademarks are the property of their respective owners.

11.6 Electrostatic Discharge Caution

This integrated circuit can be damaged by ESD. Texas Instruments recommends that all integrated circuits be handled with appropriate precautions. Failure to observe proper handling and installation procedures can cause damage.

ESD damage can range from subtle performance degradation to complete device failure. Precision integrated circuits may be more susceptible to damage because very small parametric changes could cause the device not to meet its published specifications.

11.7 Glossary

SLYZ022 — *TI Glossary*.

This glossary lists and explains terms, acronyms, and definitions.

12 Mechanical, Packaging, and Orderable Information

The following pages include mechanical, packaging, and orderable information. This information is the most current data available for the designated devices. This data is subject to change without notice and revision of this document. For browser-based versions of this data sheet, refer to the left-hand navigation.

Copyright © 2010–2016, Texas Instruments Incorporated

PACKAGING INFORMATION

Orderable part number	Status (1)	Material type (2)	Package | Pins	Package qty | Carrier	RoHS (3)	Lead finish/ Ball material (4)	MSL rating/ Peak reflow (5)	Op temp (°C)	Part marking (6)
TPS54328DDA	Active	Production	SO PowerPAD (DDA) | 8	75 | TUBE	Yes	NIPDAU | SN	Level-2-260C-1 YEAR	-40 to 85	54328
TPS54328DDA.A	Active	Production	SO PowerPAD (DDA) | 8	75 | TUBE	Yes	NIPDAU	Level-2-260C-1 YEAR	-40 to 85	54328
TPS54328DDA.B	Active	Production	SO PowerPAD (DDA) | 8	75 | TUBE	Yes	NIPDAU	Level-2-260C-1 YEAR	-40 to 85	54328
TPS54328DDAR	Active	Production	SO PowerPAD (DDA) | 8	2500 | LARGE T&R	Yes	NIPDAU | SN	Level-2-260C-1 YEAR	-40 to 85	54328
TPS54328DDAR.A	Active	Production	SO PowerPAD (DDA) | 8	2500 | LARGE T&R	Yes	NIPDAU	Level-2-260C-1 YEAR	-40 to 85	54328
TPS54328DDAR.B	Active	Production	SO PowerPAD (DDA) | 8	2500 | LARGE T&R	Yes	NIPDAU	Level-2-260C-1 YEAR	-40 to 85	54328
TPS54328DDARG4	Active	Production	SO PowerPAD (DDA) | 8	2500 | LARGE T&R	Yes	NIPDAU	Level-2-260C-1 YEAR	-40 to 85	54328
TPS54328DDARG4.A	Active	Production	SO PowerPAD (DDA) | 8	2500 | LARGE T&R	Yes	NIPDAU	Level-2-260C-1 YEAR	-40 to 85	54328
TPS54328DDARG4.B	Active	Production	SO PowerPAD (DDA) | 8	2500 | LARGE T&R	Yes	NIPDAU	Level-2-260C-1 YEAR	-40 to 85	54328
TPS54328DRCR	Active	Production	VSON (DRC) | 10	3000 | LARGE T&R	Yes	NIPDAU	Level-1-260C-UNLIM	-40 to 85	54328
TPS54328DRCR.A	Active	Production	VSON (DRC) | 10	3000 | LARGE T&R	Yes	NIPDAU	Level-1-260C-UNLIM	-40 to 85	54328
TPS54328DRCR.B	Active	Production	VSON (DRC) | 10	3000 | LARGE T&R	Yes	NIPDAU	Level-1-260C-UNLIM	-40 to 85	54328
TPS54328DRCT	Active	Production	VSON (DRC) | 10	250 | SMALL T&R	Yes	NIPDAU	Level-1-260C-UNLIM	-40 to 85	54328
TPS54328DRCT.A	Active	Production	VSON (DRC) | 10	250 | SMALL T&R	Yes	NIPDAU	Level-1-260C-UNLIM	-40 to 85	54328
TPS54328DRCT.B	Active	Production	VSON (DRC) | 10	250 | SMALL T&R	Yes	NIPDAU	Level-1-260C-UNLIM	-40 to 85	54328

(1) **Status:** For more details on status, see our product life cycle.

(2) **Material type:** When designated, preproduction parts are prototypes/experimental devices, and are not yet approved or released for full production. Testing and final process, including without limitation quality assurance, reliability performance testing, and/or process qualification, may not yet be complete, and this item is subject to further changes or possible discontinuation. If available for ordering, purchases will be subject to an additional waiver at checkout, and are intended for early internal evaluation purposes only. These items are sold without warranties of any kind.

(3) **RoHS values:** Yes, No, RoHS Exempt. See the TI RoHS Statement for additional information and value definition.

(4) **Lead finish/Ball material:** Parts may have multiple material finish options. Finish options are separated by a vertical ruled line. Lead finish/Ball material values may wrap to two lines if the finish value exceeds the maximum column width.

(5) **MSL rating/Peak reflow:** The moisture sensitivity level ratings and peak solder (reflow) temperatures. In the event that a part has multiple moisture sensitivity ratings, only the lowest level per JEDEC standards is shown. Refer to the shipping label for the actual reflow temperature that will be used to mount the part to the printed circuit board.

(6) **Part marking:** There may be an additional marking, which relates to the logo, the lot trace code information, or the environmental category of the part.

Multiple part markings will be inside parentheses. Only one part marking contained in parentheses and separated by a "~" will appear on a part. If a line is indented then it is a continuation of the previous line and the two combined represent the entire part marking for that device.

Important Information and Disclaimer: The information provided on this page represents TI's knowledge and belief as of the date that it is provided. TI bases its knowledge and belief on information provided by third parties, and makes no representation or warranty as to the accuracy of such information. Efforts are underway to better integrate information from third parties. TI has taken and continues to take reasonable steps to provide representative and accurate information but may not have conducted destructive testing or chemical analysis on incoming materials and chemicals. TI and TI suppliers consider certain information to be proprietary, and thus CAS numbers and other limited information may not be available for release.

In no event shall TI's liability arising out of such information exceed the total purchase price of the TI part(s) at issue in this document sold by TI to Customer on an annual basis.

TAPE AND REEL INFORMATION

REEL DIMENSIONS

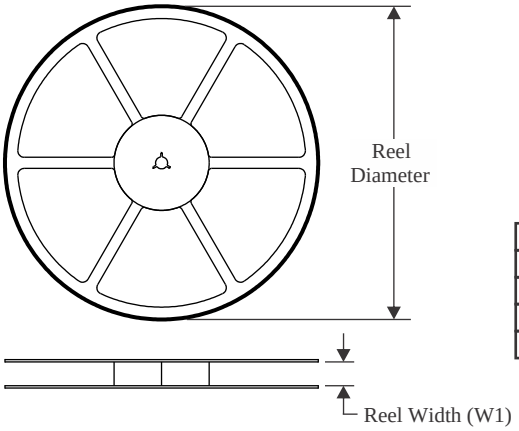

TAPE DIMENSIONS

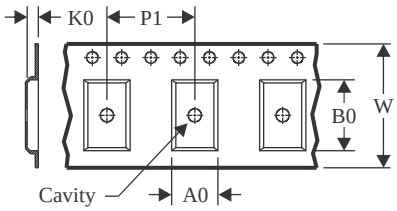

A0	Dimension designed to accommodate the component width
B0	Dimension designed to accommodate the component length
K0	Dimension designed to accommodate the component thickness
W	Overall width of the carrier tape
P1	Pitch between successive cavity centers

QUADRANT ASSIGNMENTS FOR PIN 1 ORIENTATION IN TAPE

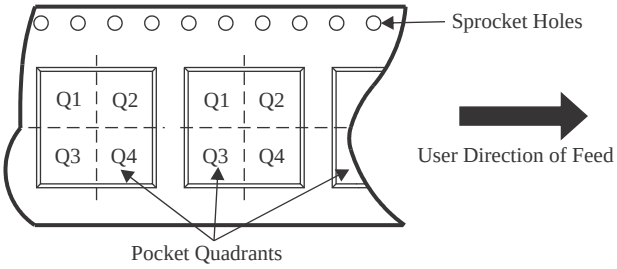

*All dimensions are nominal

Device	Package Type	Package Drawing	Pins	SPQ	Reel Diameter (mm)	Reel Width W1 (mm)	A0 (mm)	B0 (mm)	K0 (mm)	P1 (mm)	W (mm)	Pin1 Quadrant
TPS54328DDAR	SO PowerPAD	DDA	8	2500	330.0	12.8	6.4	5.2	2.1	8.0	12.0	Q1
TPS54328DRCR	VSON	DRC	10	3000	330.0	12.4	3.3	3.3	1.1	8.0	12.0	Q2
TPS54328DRCT	VSON	DRC	10	250	180.0	12.4	3.3	3.3	1.1	8.0	12.0	Q2

TAPE AND REEL BOX DIMENSIONS

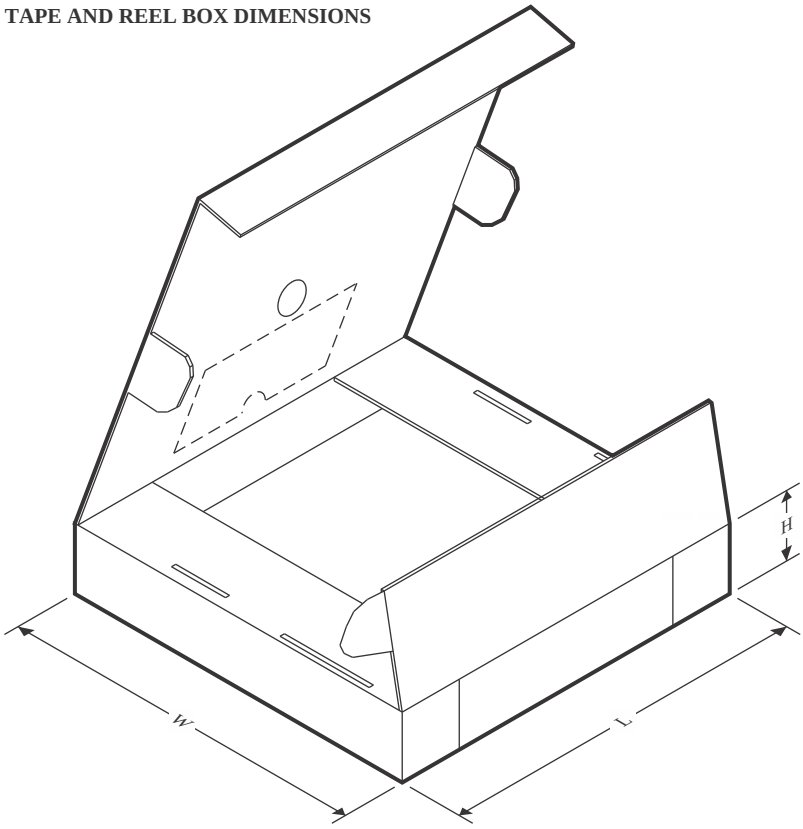

*All dimensions are nominal

Device	Package Type	Package Drawing	Pins	SPQ	Length (mm)	Width (mm)	Height (mm)
TPS54328DDAR	SO PowerPAD	DDA	8	2500	366.0	364.0	50.0
TPS54328DRCR	VSON	DRC	10	3000	335.0	335.0	25.0
TPS54328DRCT	VSON	DRC	10	250	182.0	182.0	20.0

TUBE

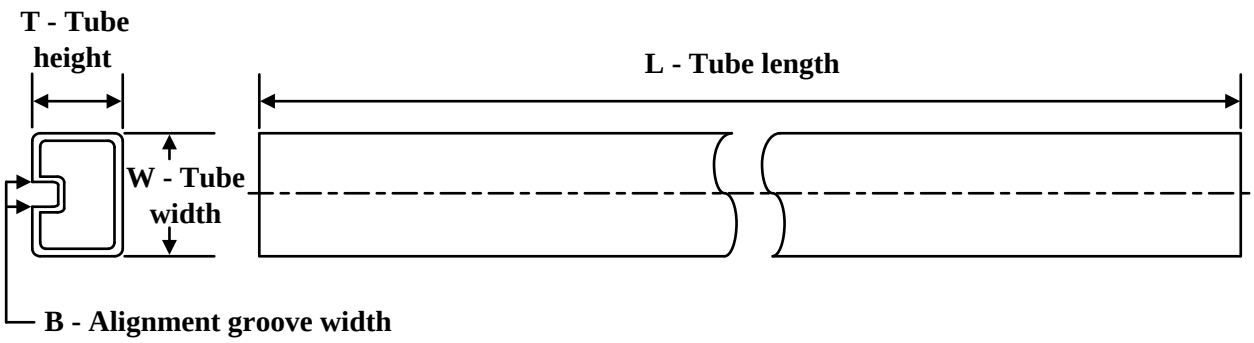

*All dimensions are nominal

Device	Package Name	Package Type	Pins	SPQ	L (mm)	W (mm)	T (µm)	B (mm)
TPS54328DDA	DDA	HSOIC	8	75	517	7.87	635	4.25
TPS54328DDA	DDA	HSOIC	8	75	507	8	3940	4.32
TPS54328DDA.A	DDA	HSOIC	8	75	517	7.87	635	4.25
TPS54328DDA.A	DDA	HSOIC	8	75	507	8	3940	4.32
TPS54328DDA.B	DDA	HSOIC	8	75	507	8	3940	4.32
TPS54328DDA.B	DDA	HSOIC	8	75	517	7.87	635	4.25

DDA 8 PowerPAD™ SOIC - 1.7 mm max height

PLASTIC SMALL OUTLINE

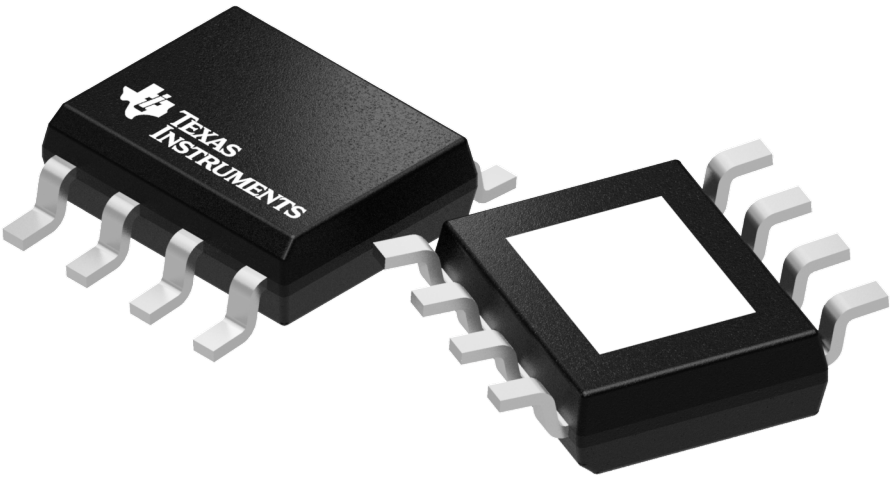

Images above are just a representation of the package family, actual package may vary.
Refer to the product data sheet for package details.

DDA (R-PDSO-G8) PowerPAD™ PLASTIC SMALL-OUTLINE

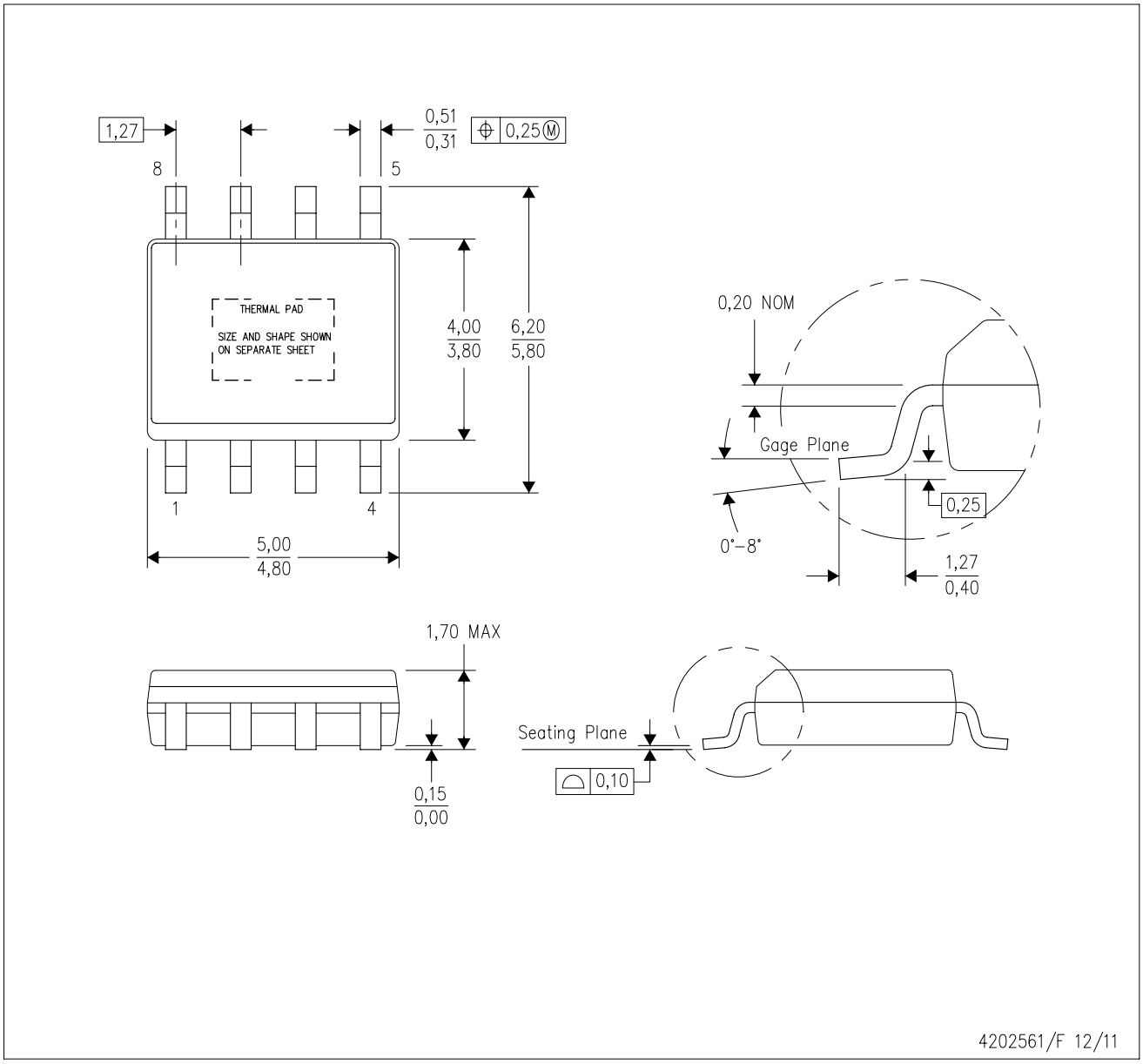

NOTES:
A. All linear dimensions are in millimeters. Dimensioning and tolerancing per ASME Y14.5–1994.
B. This drawing is subject to change without notice.
C. Body dimensions do not include mold flash or protrusion not to exceed 0,15.
D. This package is designed to be soldered to a thermal pad on the board. Refer to Technical Brief, PowerPad Thermally Enhanced Package, Texas Instruments Literature No. SLMA002 for information regarding recommended board layout. This document is available at www.ti.com <http://www.ti.com>.
E. See the additional figure in the Product Data Sheet for details regarding the exposed thermal pad features and dimensions.
F. This package complies to JEDEC MS-012 variation BA

PowerPAD is a trademark of Texas Instruments.

DDA (R-PDSO-G8) PowerPAD™ PLASTIC SMALL OUTLINE

THERMAL INFORMATION

This PowerPAD™ package incorporates an exposed thermal pad that is designed to be attached to a printed circuit board (PCB). The thermal pad must be soldered directly to the PCB. After soldering, the PCB can be used as a heatsink. In addition, through the use of thermal vias, the thermal pad can be attached directly to the appropriate copper plane shown in the electrical schematic for the device, or alternatively, can be attached to a special heatsink structure designed into the PCB. This design optimizes the heat transfer from the integrated circuit (IC).

For additional information on the PowerPAD package and how to take advantage of its heat dissipating abilities, refer to Technical Brief, PowerPAD Thermally Enhanced Package, Texas Instruments Literature No. SLMA002 and Application Brief, PowerPAD Made Easy, Texas Instruments Literature No. SLMA004. Both documents are available at www.ti.com.

The exposed thermal pad dimensions for this package are shown in the following illustration.

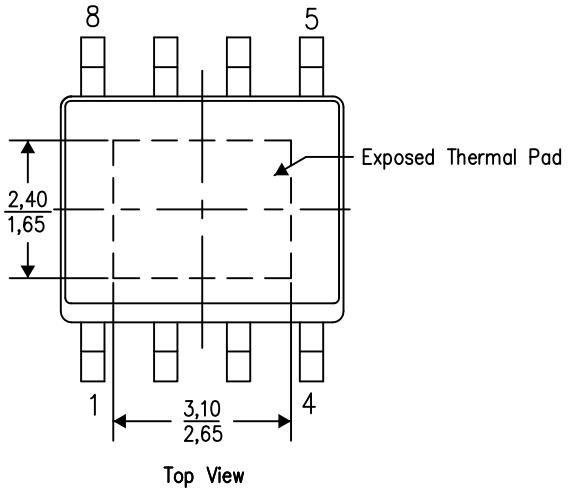

Exposed Thermal Pad Dimensions

4206322-6/L 05/12

NOTE: A. All linear dimensions are in millimeters

PowerPAD is a trademark of Texas Instruments

DDA (R–PDSO–G8) PowerPAD™ PLASTIC SMALL OUTLINE

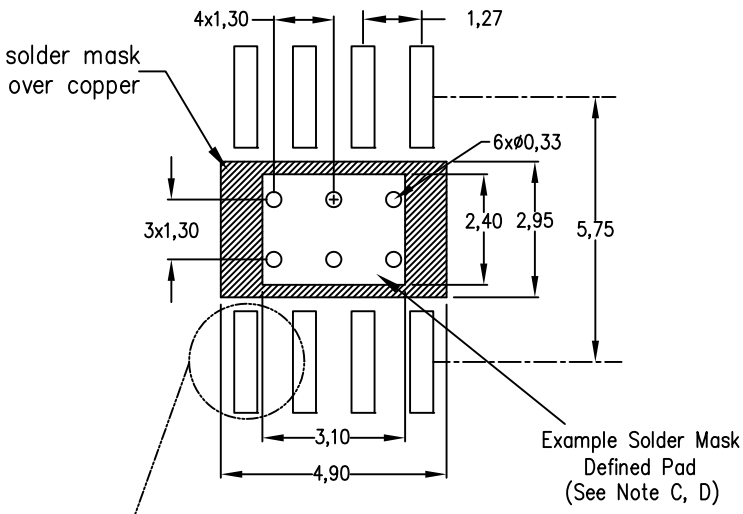

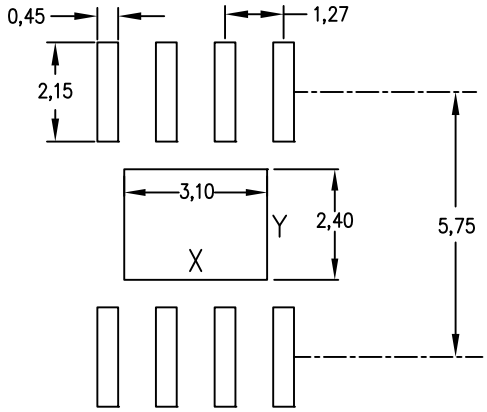

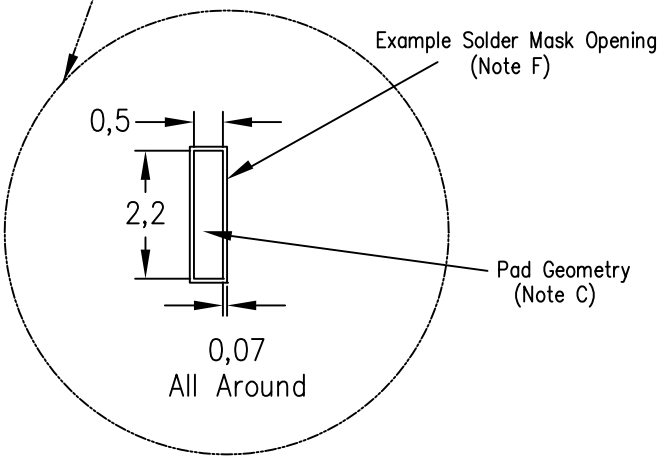

Center Power Pad Solder Stencil Opening		
Stencil Thickness	X	Y
0.1mm	3.3	2.6
0.127mm	3.1	2.4
0.152mm	2.9	2.2
0.178mm	2.8	2.1

4208951–6/D 04/12

NOTES:
A. All linear dimensions are in millimeters.
B. This drawing is subject to change without notice.
C. Publication IPC–7351 is recommended for alternate designs.
D. This package is designed to be soldered to a thermal pad on the board. Refer to Technical Brief, PowerPad Thermally Enhanced Package, Texas Instruments Literature No. SLMA002, SLMA004, and also the Product Data Sheets for specific thermal information, via requirements, and recommended board layout. These documents are available at www.ti.com <http://www.ti.com>. Publication IPC–7351 is recommended for alternate designs.
E. Laser cutting apertures with trapezoidal walls and also rounding corners will offer better paste release. Customers should contact their board assembly site for stencil design recommendations. Example stencil design based on a 50% volumetric metal load solder paste. Refer to IPC–7525 for other stencil recommendations.
F. Customers should contact their board fabrication site for solder mask tolerances between and around signal pads.

PowerPAD is a trademark of Texas Instruments.

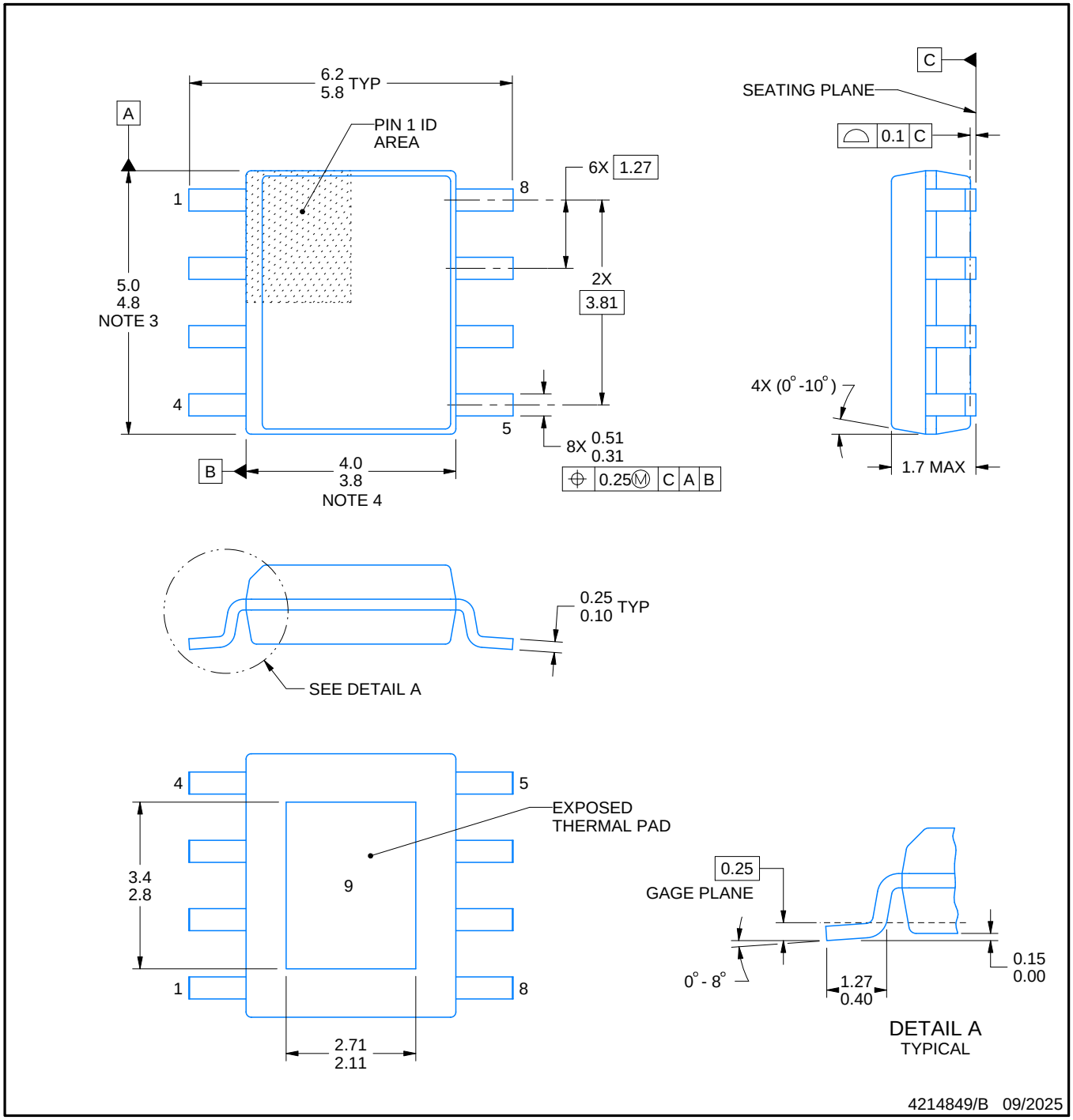

PowerPAD is a trademark of Texas Instruments.

NOTES:

1. All linear dimensions are in millimeters. Any dimensions in parenthesis are for reference only. Dimensioning and tolerancing per ASME Y14.5M.
2. This drawing is subject to change without notice.
3. This dimension does not include mold flash, protrusions, or gate burrs. Mold flash, protrusions, or gate burrs shall not exceed 0.15 mm per side.
4. This dimension does not include interlead flash. Interlead flash shall not exceed 0.25 mm per side.
5. Reference JEDEC registration MS-012.

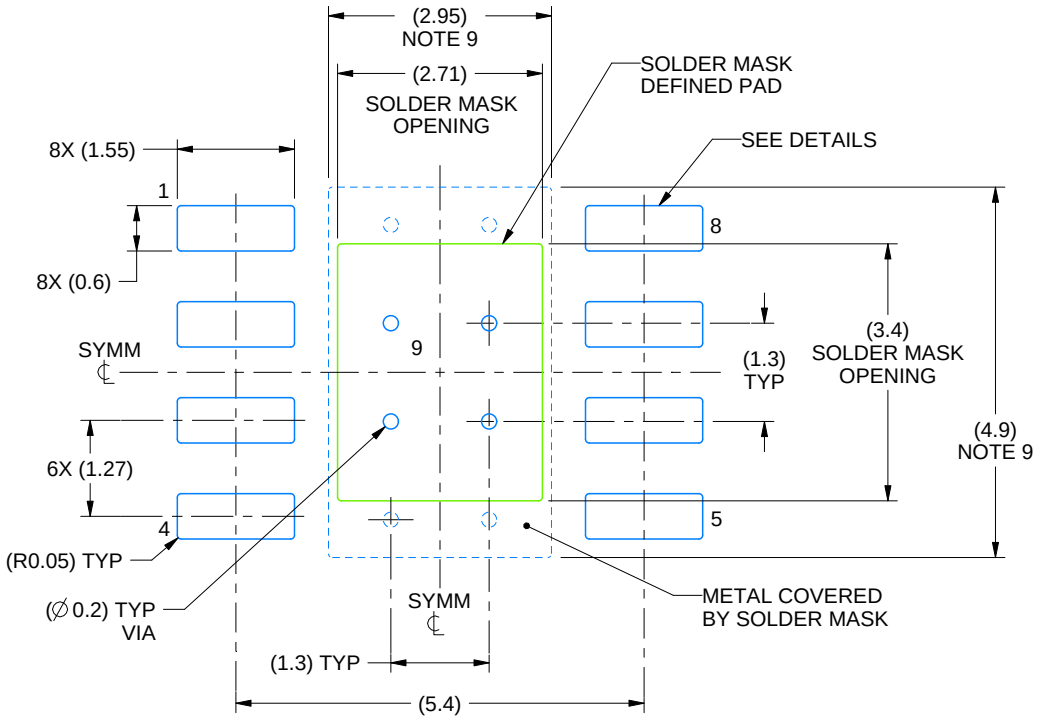

LAND PATTERN EXAMPLE
SCALE:10X

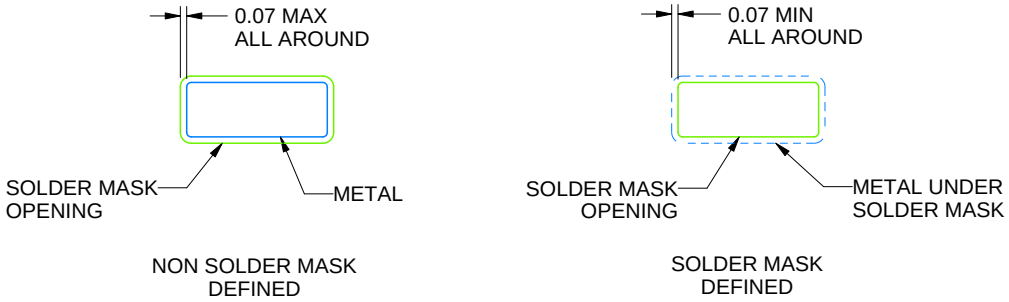

SOLDER MASK DETAILS
PADS 1-8

4214849/B 09/2025

NOTES: (continued)

6. Publication IPC-7351 may have alternate designs.
7. Solder mask tolerances between and around signal pads can vary based on board fabrication site.
8. This package is designed to be soldered to a thermal pad on the board. For more information, see Texas Instruments literature numbers SLMA002 (www.ti.com/lit/slma002) and SLMA004 (www.ti.com/lit/slma004).
9. Size of metal pad may vary due to creepage requirement.
10. Vias are optional depending on application, refer to device data sheet. If any vias are implemented, refer to their locations shown on this view. It is recommended that vias under paste be filled, plugged or tented.

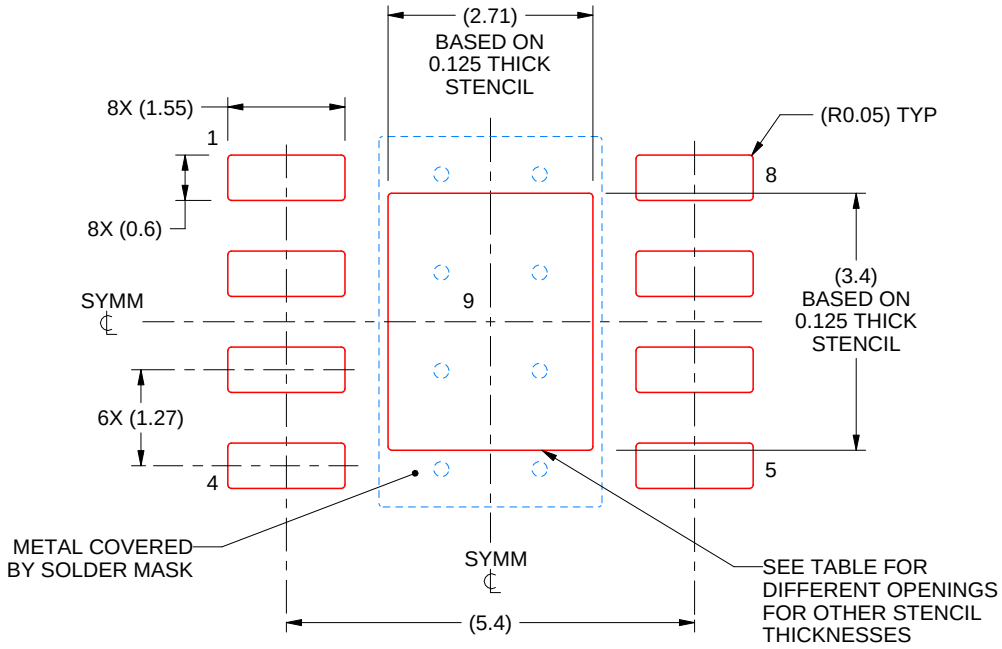

SOLDER PASTE EXAMPLE
EXPOSED PAD
100% PRINTED SOLDER COVERAGE BY AREA
SCALE:10X

STENCIL THICKNESS	SOLDER STENCIL OPENING
0.1	3.03 X 3.80
0.125	2.71 X 3.40 (SHOWN)
0.150	2.47 X 3.10
0.175	2.29 X 2.87

4214849/B 09/2025

NOTES: (continued)

11. Laser cutting apertures with trapezoidal walls and rounded corners may offer better paste release. IPC-7525 may have alternate design recommendations.
12. Board assembly site may have different recommendations for stencil design.

GENERIC PACKAGE VIEW

DRC 10

VSON - 1 mm max height

3 x 3, 0.5 mm pitch

PLASTIC SMALL OUTLINE - NO LEAD

This image is a representation of the package family, actual package may vary.
Refer to the product data sheet for package details.

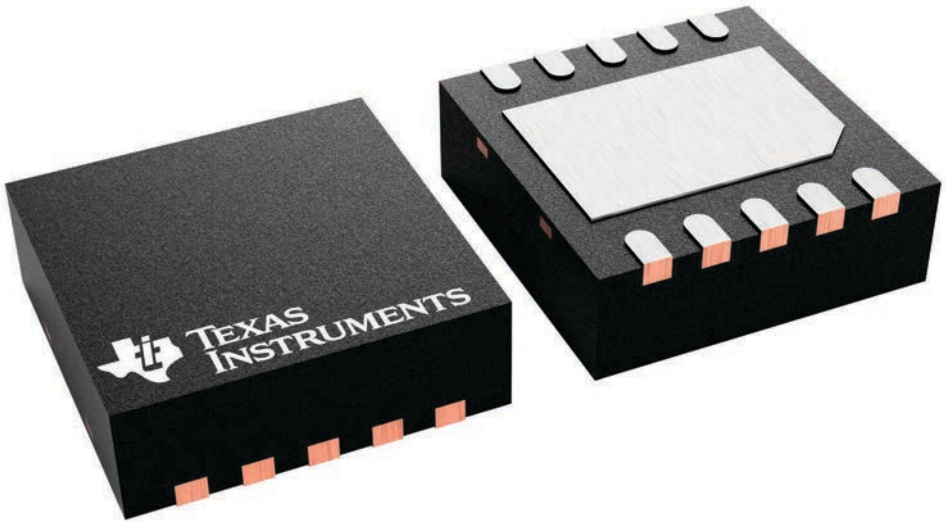

4226193/A

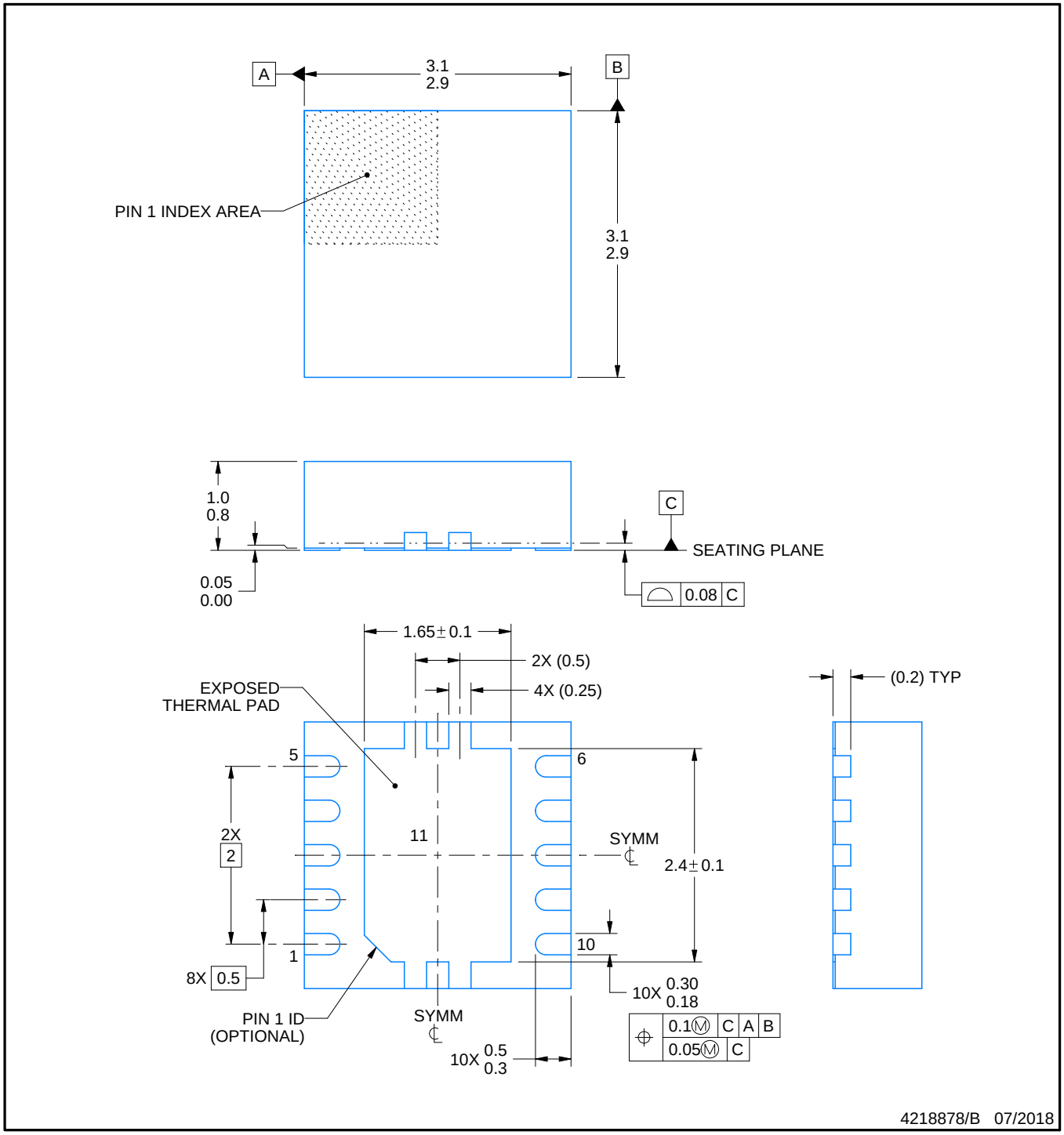

NOTES:

1. All linear dimensions are in millimeters. Any dimensions in parenthesis are for reference only. Dimensioning and tolerancing per ASME Y14.5M.
2. This drawing is subject to change without notice.
3. The package thermal pad must be soldered to the printed circuit board for optimal thermal and mechanical performance.

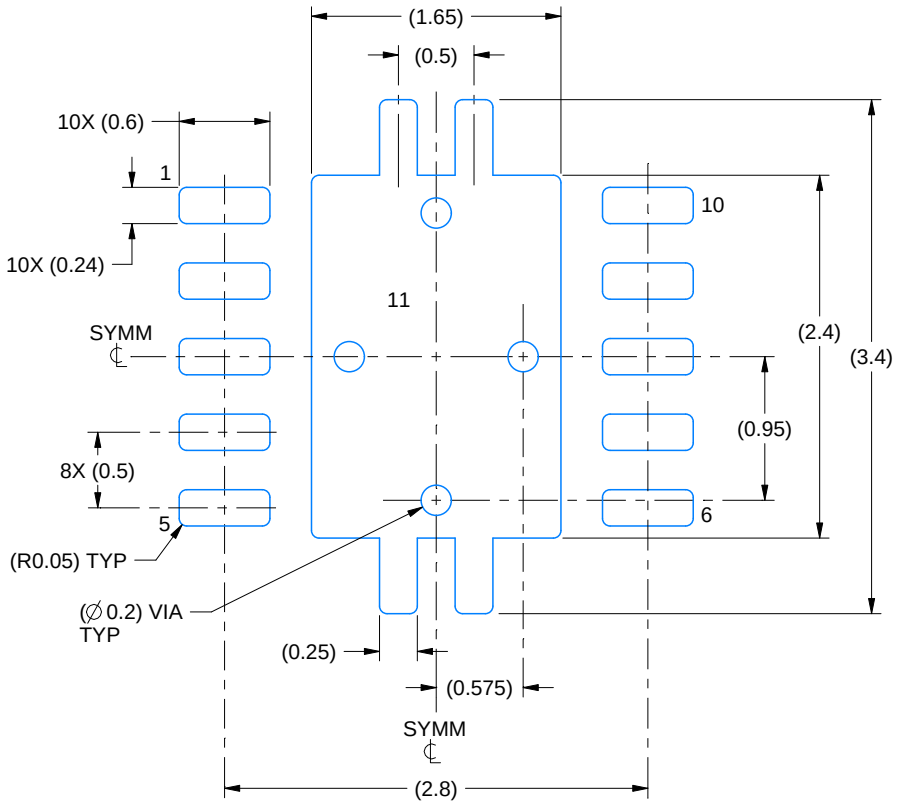

LAND PATTERN EXAMPLE
EXPOSED METAL SHOWN
SCALE:20X

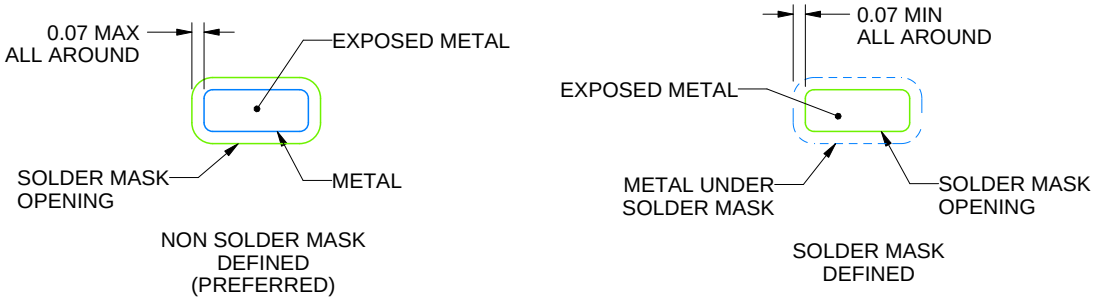

SOLDER MASK DETAILS

4218878/B 07/2018

NOTES: (continued)

4. This package is designed to be soldered to a thermal pad on the board. For more information, see Texas Instruments literature number SLUA271 (www.ti.com/lit/slua271).
5. Vias are optional depending on application, refer to device data sheet. If any vias are implemented, refer to their locations shown on this view. It is recommended that vias under paste be filled, plugged or tented.

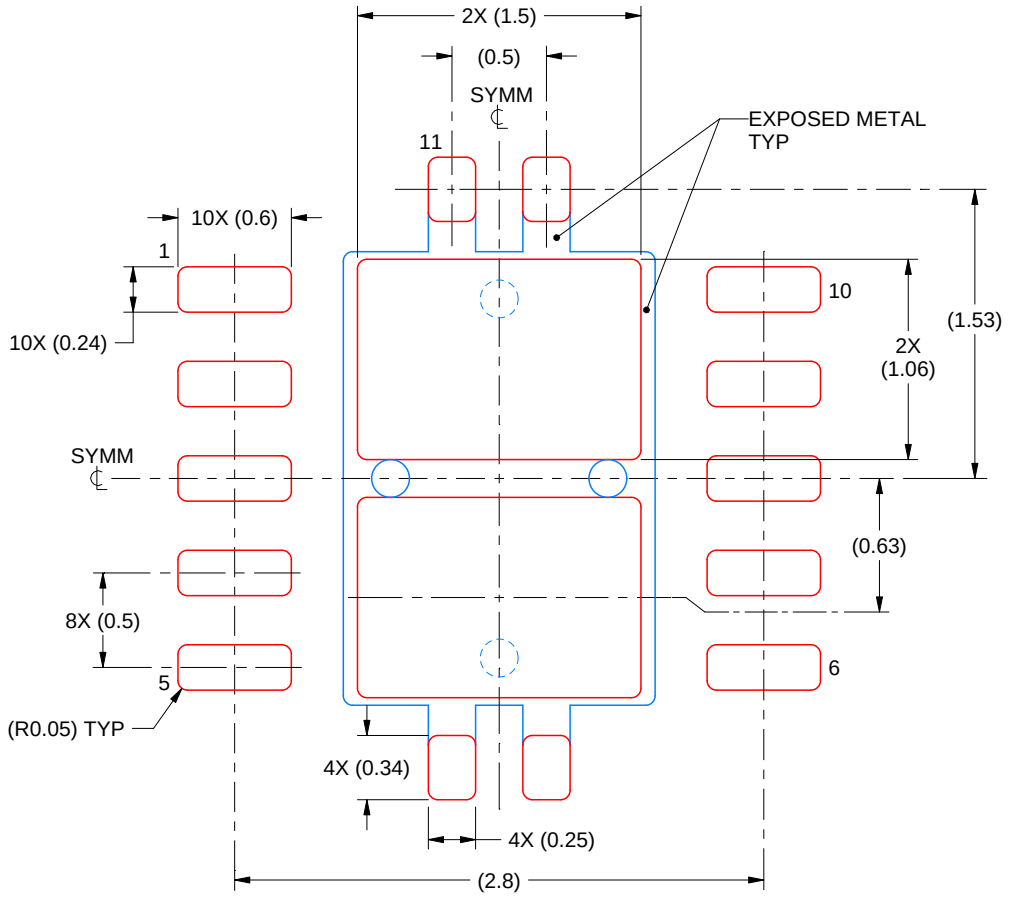

SOLDER PASTE EXAMPLE
BASED ON 0.125 mm THICK STENCIL

EXPOSED PAD 11:
80% PRINTED SOLDER COVERAGE BY AREA
SCALE:25X

4218878/B 07/2018

NOTES: (continued)

6. Laser cutting apertures with trapezoidal walls and rounded corners may offer better paste release. IPC-7525 may have alternate design recommendations.

IMPORTANT NOTICE AND DISCLAIMER

TI PROVIDES TECHNICAL AND RELIABILITY DATA (INCLUDING DATASHEETS), DESIGN RESOURCES (INCLUDING REFERENCE DESIGNS), APPLICATION OR OTHER DESIGN ADVICE, WEB TOOLS, SAFETY INFORMATION, AND OTHER RESOURCES “AS IS” AND WITH ALL FAULTS, AND DISCLAIMS ALL WARRANTIES, EXPRESS AND IMPLIED, INCLUDING WITHOUT LIMITATION ANY IMPLIED WARRANTIES OF MERCHANTABILITY, FITNESS FOR A PARTICULAR PURPOSE OR NON-INFRINGEMENT OF THIRD PARTY INTELLECTUAL PROPERTY RIGHTS.

These resources are intended for skilled developers designing with TI products. You are solely responsible for (1) selecting the appropriate TI products for your application, (2) designing, validating and testing your application, and (3) ensuring your application meets applicable standards, and any other safety, security, regulatory or other requirements.

These resources are subject to change without notice. TI grants you permission to use these resources only for development of an application that uses the TI products described in the resource. Other reproduction and display of these resources is prohibited. No license is granted to any other TI intellectual property right or to any third party intellectual property right. TI disclaims responsibility for, and you fully indemnify TI and its representatives against any claims, damages, costs, losses, and liabilities arising out of your use of these resources.

TI’s products are provided subject to TI’s Terms of Sale, TI’s General Quality Guidelines, or other applicable terms available either on ti.com or provided in conjunction with such TI products. TI’s provision of these resources does not expand or otherwise alter TI’s applicable warranties or warranty disclaimers for TI products. Unless TI explicitly designates a product as custom or customer-specified, TI products are standard, catalog, general purpose devices.

TI objects to and rejects any additional or different terms you may propose.

Copyright © 2026, Texas Instruments Incorporated

Last updated 10/2025